# K-BKR KL SERIE 375

Ball valves, 375 series

## Osobine

| | |
|---|---|
| **Radni pritisak** | max. 70 bar (depending on temperature and nominal size) |
| **Referentne vrednosti** | G 1/4 to G 1: 20 °C: 70 bar, 60 °C: 65 bar, 100 °C: 45 bar, 150 °C: 7 bar, 180 °C: 4 bar, 200 °C: 0 bar<br>G 1 1/4 to G 1 1/2: 20 °C: 70 bar, 60 °C: 55 bar, 100 °C: 35 bar, 150 °C: 7 bar, 180 °C: 4 bar, 200 °C: 0 bar<br>G 2: 20 °C: 60 bar, 60 °C: 40 bar, 10 |
| **Radna temperatura** | 200 °C at 0 bar |
| **Zaptivka** | 15 % RPTFE (glass fibre reinforced PTFE) |
| **Ručna poluga** | Stainless steel 1.4301 |

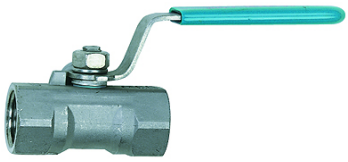

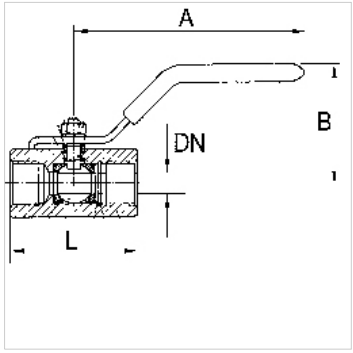


## Napomena

G thread acc. to DIN EN ISO 228-1, with ISO flange plate (acc. to ISO 5211)
Ostali podaci na upit.

## Napomene u vezi porudžbine

For use on devices that have to be vented whenever they are turned off, either because of safety regulations or for technical reasons. The pneumatic devices are disconnected from the system and simultaneously vented each time they are shut off.

## Dodatne informacije

G thread acc. DIN EN ISO 228-1

## Artikal

| Naziv | DN | Navoj | A (mm) | B (mm) | L (mm) | Materijal |
|---|---|---|---|---|---|---|
| **K- 07 30 15 36** | 5 | G 1/4 | 69,0 | 34,0 | 39,0 | Stainless steel 1.4401/1.4408 |
| **K- 07 30 15 37** | 7 | G 3/8 | 83,0 | 38,0 | 44,0 | Stainless steel 1.4401/1.4408 |
| **K- 07 30 15 38** | 10 | G 1/2 | 96,0 | 41,0 | 59,0 | Stainless steel 1.4401/1.4408 |
| **K- 07 30 15 39** | 13 | G 3/4 | 96,0 | 45,0 | 60,0 | Stainless steel 1.4401/1.4408 |
| **K- 07 30 29 80** | 16 | G 1 | 116,0 | 52,0 | 72,0 | Stainless steel 1.4401/1.4408 |
| **K- 07 30 29 81** | 20 | G 1 1/4 | 116,0 | 57,0 | 77,0 | Stainless steel 1.4401/1.4408 |
| **K- 07 30 29 82** | 25 | G 1 1/2 | 158,0 | 62,0 | 84,0 | Stainless steel 1.4401/1.4408 |
| **K- 07 30 29 83** | 32 | G 2 | 158,0 | 68,0 | 100,0 | Stainless steel 1.4401/1.4408 |

*Uprkos pažljivom proveravanju, ne možemo isključiti greške i ne preuzimamo nikakvu garanciju za navedene podatke.*