K-3/2 ANFAV 230 V AC, 50 HZ HW G

Start-up valves, power supply 230 V AC, 50 Hz, with »HW« mounting bracket and silencer

Osobine

Ulazni pritisak	2.5 - 9 bar
Temperatura medija	max. 70 °C
Temperatura okoline	Max. 70 °C
Priključak na električnu mrežu	Coupler plug PG 9 - form B
Zaptivni materijal	NBR
Kućište	Die-cast aluminium
Merenje vrednosti protoka	At P1 = 8 bar, P2 = 6 bar and pressure drop Δp = 1 bar
Ostali podaci	User manual on request



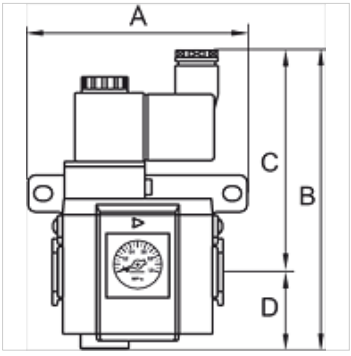

Artikal

Naziv	Navoj	Protok (L/min)	A (mm)	B	C (mm)	D (mm)	Konstrukciona veličina
K- 07 25 12 04	G 1/4	1600	65,0	131,0 mm	97,0	34,0	300
K- 07 25 12 06	G 3/8	2500	65,0	131,0 mm	97,0	34,0	300
K- 07 25 12 08	G 1/2	2500	65,0	131,0 mm	97,0	34,0	300
K- 07 25 12 10	G 3/8	4500	78,0	142,5 mm	102,0	40,5	400
K- 07 25 12 12	G 1/2	4500	78,0	142,5 mm	102,0	40,5	400

Pribor

K-VERBINDUNGELEMENTE	Connecting sets
K-WANDHALTER	Wall bracket
K-HALTERBAUSATZ	Holder

Uprkos pažljivom proveravanju, ne možemo isključiti greške i ne preuzimamo nikakvu garanciju za navedene podatke.