K-S-BKR M ENTL ABSCHL

Safety ball valves lockable, with relief port

Osobine

Radni pritisak	maks. 10 bara
Radna temperatura	-20 °C to max. +100 °C
Otvor za odzračivanje	M 5
Opis navoja	Rp thread acc. to ISO 7-1
Ručna poluga	Stainless steel - PVC coated
Zaptivka kugle	PTFE / NBR
Zaptivka vretena	PTFE
Materijal	plemeniti čelik

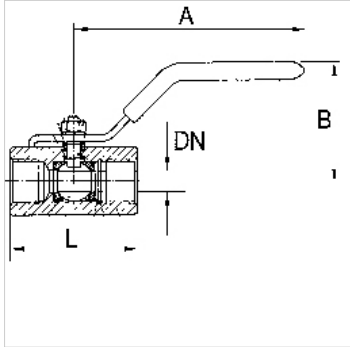

Napomena

G thread acc. to DIN EN ISO 228-1, with ISO flange plate (acc. to ISO 5211)
Ostali podaci na upit.

Opis

2/2-way stainless steel safety ball valves. Specially designed for pneumatic applications. The ball valve can be locked manually and has a relief port.

Dodatne informacije

The price does not include a padlock. Please order separately.

Artikal

Naziv	DN	Navoj	A (mm)	B (mm)	L (mm)
K- 07 30 15 16	8	Rp 1/4	100,0	50,0	55,0
K- 07 30 15 17	10	Rp 3/8	100,0	50,0	55,0
K- 07 30 15 18	15	Rp 1/2	130,0	60,0	65,0
K- 07 30 15 19	20	Rp 3/4	130,0	64,0	74,6
K- 07 30 15 20	25	Rp 1	165,0	71,0	88,0
K- 07 30 15 21	32	Rp 1 1/4	165,0	78,0	102,0
K- 07 30 15 22	40	Rp 1 1/2	190,0	86,0	110,0
K- 07 30 15 23	50	Rp 2	190,0	95,0	125,0

Pribor

K-VORHAENGESCHLOSS	Padlock

Uprkos pažljivom proveravanju, ne možemo isključiti greške i ne preuzimamo nikakvu garanciju za navedene podatke.