K-WTST SAFETY BK SCHA AN FILR HANSA

SAFETY service unit sets, comprising a ball valve with silencer, start-up valve and filter regulator

Osobine

Ulazni pritisak	2.5 - 16 bar
Izlazni pritisak	0.5 - 8 bar
Temperaturni opseg	-10 °C to +50 °C
Mediji	Komprimovani vazduh
Zaptivni materijal	NBR
Priključni navoj	Material: Die-cast zinc
Posuda	Polycarbonate (with bayonet lock) and bowl guard
Elemenat filtera	Cellpor (PE) 5 µm
Kućište	Material: Grivory® (PA 66)
Membrana	NBR
Sopstvena potrošnja vazduha	Max. 1.5 l/min (depending on secondary pressure)
Merenje vrednosti protoka	At P1 = 10 bar, P2 = 6.3 bar and pressure drop Δp = 1 bar
Priključak za odzračivanje Kuglični ventil	Silencer



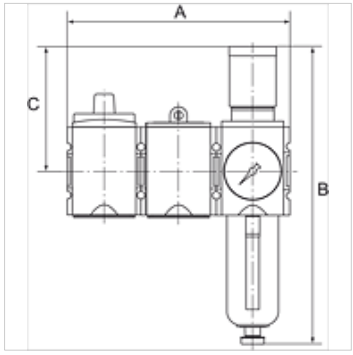

Napomena

Ostali podaci na upit.

Opis

These compressed air service unit sets, comprising a ball valve with silencer, a start-up valve and one out of a pressure regulator, filter regulator or service unit, meet even the strictest requirements for operating reliability and accident prevention!

Napomene u vezi porudžbine

The price does not include a key lock and padlock. Please order separately. For accessories and spare parts, refer to individual components: ball valve, start-up valve, pressure regulator, filter regulator, 2-piece service unit

Artikal

Naziv	Navoj	Protok (L/min)	A (mm)	B	C (mm)	Ispust kondenzata
K- 07 25 15 26	G 1/4	2000	156,0	225,0 mm	95,5	Semi
K- 07 25 15 27	G 3/8	2000	156,0	225,0 mm	95,5	Semi
K- 07 25 15 28	G 3/8	4300	189,0	257,0 mm	110,0	Semi
K- 07 25 15 29	G 1/2	4300	189,0	257,0 mm	110,0	Semi
K- 07 25 15 30	G 3/4	10000	255,0	329,0 mm	137,0	Semi
K- 07 25 15 31	G 1	10000	255,0	329,0 mm	137,0	Semi
K- 07 25 15 32	G 1/4	2000	156,0	243,0 mm	95,5	Auto
K- 07 25 15 33	G 3/8	2000	156,0	243,0 mm	95,5	Auto
K- 07 25 15 34	G 3/8	4300	189,0	274,0 mm	110,0	Auto
K- 07 25 15 35	G 1/2	4300	189,0	274,0 mm	110,0	Auto
K- 07 25 15 36	G 3/4	10000	255,0	343,0 mm	137,0	Auto
K- 07 25 15 37	G 1	10000	255,0	343,0 mm	137,0	Auto

Pribor

K-STECKSCHLOSS	Key lock
K-VORHAENGESCHLOSS	Padlock

Uprkos pažljivom proveravanju, ne možemo isključiti greške i ne preuzimamo nikakvu garanciju za navedene podatke.