K-SCHALLDAE SINTERBR SK

Silencers, sintered bronze, with hexagon nut

Osobine

Radni pritisak	0 - 8 bar
Radna temperatura	-10 °C to +250 °C
Nivo buke 6bara	71 ~ 108 dB(A)



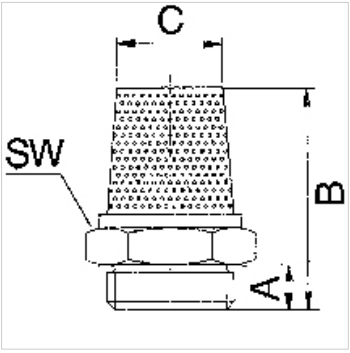

Napomena

Ostali podaci na upit.

Opis

For reducing the exhaust noise generated by pneumatic equipment.

Artikal

Naziv	Navoj	A (mm)	B (mm)	C (mm)	SW
K- 07 40 34 77	G 1/8	6,0	28,0	8,0	13 mm
K- 07 40 34 78	G 1/4	8,0	34,0	12,0	17 mm
K- 07 40 34 79	G 3/8	10,0	36,0	15,0	22 mm
K- 07 40 34 80	G 1/2	12,0	44,0	19,0	27 mm
K- 07 40 34 81	G 3/4	14,0	54,0	22,0	32 mm
K- 07 40 34 82	G 1	16,0	66,0	28,0	41 mm

Uprkos pažljivom proveravanju, ne možemo isključiti greške i ne preuzimamo nikakvu garanciju za navedene podatke.