K-DRG DRV 250 NIEDERDRUCK

DRV 250 pressure regulators, low-pressure type

HANSA-FLEX

Osobine

Ulazni pritisak	Max. 25 bar (Series 200 and 300 Series), Max. 40 bar (400 Series)
Temperaturni opseg	Max. 75 °C
Odnos redukcije	Max. 10:1 (200 Series), Max. 20:1 (300 Series), Max. 6:1 (400 Series)
Zaptivni materijal	NBR
Poklopac opruge	Pressed brass up to DN 25, Grey cast iron from DN 32
Kućište	Red brass 2.1096.01



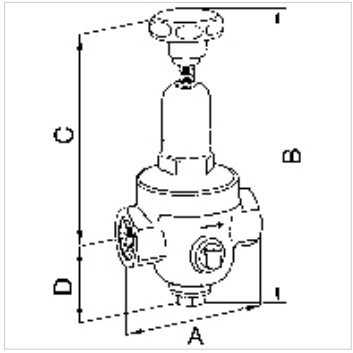

Napomena

Ostali podaci na upit.

Opis

Diaphragm pressure regulators with non-self-relieving design and non-pressure-reduced single-seated valve. Very precise adjustment. Good response characteristic because of only a few moving parts which hence minimal friction. Ideal for compressed air, nitrogen and other neutral, non-flammable gases, but only suitable for liquids with comparatively low flow rates.

Napomene u vezi porudžbine

Ostali modeli na zahtev

Dodatne informacije

Ostali modeli na zahtev

Artikal

Naziv	Navoj	Opseg regulacije	kvs-vrednost protoka (m3/h)	A (mm)	B	C (mm)	D (mm)
K- 07 25 04 94	G 1/4	0.2 - 2 bar	0,5	70,0	185,5 mm	140,0	45,5
K- 07 25 04 95	G 3/8	0.2 - 2 bar	0,6	70,0	185,5 mm	140,0	45,5
K- 07 25 04 96	G 1/2	0.2 - 2 bar	1,2	85,0	232,5 mm	186,0	46,5

Rezervni delovi

K-VERSCHLEI-SATZ	Set of wearing parts

Uprkos pažljivom proveravanju, ne možemo isključiti greške i ne preuzimamo nikakvu garanciju za navedene podatke.