K-FI REGL PC-BEHAELTER S V HW G

Filter regulators with polycarbonate bowl, bowl guard and »HW« mounting bracket, fully-automatic drain valve

Osobine

Ulazni pritisak	Max. 10 bar
Temperatura medija	max. 70 °C
Temperatura okoline	Max. 70 °C
Širina pora u elementu filtera	5 µm
Zaptivni materijal	NBR
Poklopac opruge	POM
Kućište	Die-cast aluminium
Drain valve	Semi- or fully-automatic
Merenje vrednosti protoka	At P1 = 8 bar, P2 = 6 bar and pressure drop Δp = 1 bar
Ostali podaci	User manual on request



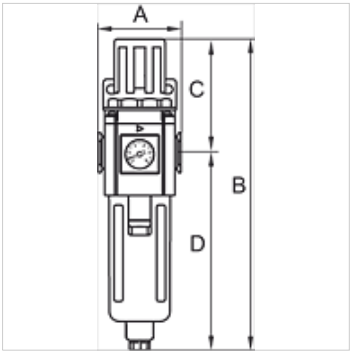

Artikal

Naziv	Navoj	Opseg regulacije	Protok (L/min)	A (mm)	B	C (mm)	D (mm)	Konstrukciona veličina
K- 07 25 06 96	G 1/4	1.5 - 9 bar	1450	51,0	225,5 mm	82,5	143,0	300
K- 07 25 06 98	G 3/8	1.5 - 9 bar	1750	51,0	225,5 mm	82,5	143,0	300
K- 07 25 07 00	G 1/2	1.5 - 9 bar	1750	51,0	225,5 mm	82,5	143,0	300
K- 07 25 07 02	G 3/8	1.5 - 9 bar	3750	68,0	270,5 mm	104,0	166,5	400
K- 07 25 07 04	G 1/2	1.5 - 9 bar	3750	68,0	270,5 mm	104,0	166,5	400

Pribor

K-VERSCHLEI-SATZ	Set of wearing parts
K-ERSATZMEMBRANE	Replacement diaphragm
K-ADAPTERPLATTEN HANSA	Adapter plate HANSA
K-ERSATZBEHAELTER G UND G-MINI POLY	Spare tanks »G« Series and »G-mini« Series Polycarbonat
K-SCHUTZKORB G	Protective cage
K-FILTERELEMENT	Filter element
K-HALTERBAUSATZ	Holder
K-VERBINDUNGELEMENTE	Connecting sets
K-WANDHALTER	Wall bracket

Uprkos pažljivom proveravanju, ne možemo isključiti greške i ne preuzimamo nikakvu garanciju za navedene podatke.