K-BKR GELB STAHLHEBEL IG IG

Ball valves with yellow steel lever, lighweight type, female/female thread

HANSA FLEX

Osobine

Oblast primene	Compressed air, water, non-toxic and non-corrosive gases, heating systems, agriculture
Radni pritisak	Max. 40 bar
Radna temperatura	-15 °C to +90 °C
Opis navoja	G thread acc. DIN EN ISO 228-1
Kućište	Nickel-plated brass
Poluga	Steel, with plastic coating
Kugla	Chrome-plated brass
Zaptivka kugle	PTFE
Zaptivka vretena	HNBR / EPDM / PTFE. 2 O-Rings (HNBR / EPDM) 1 gasket (PTFE) additional PTFE-gasket

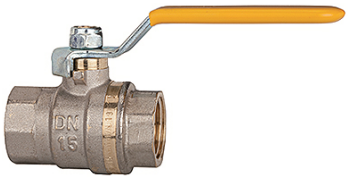

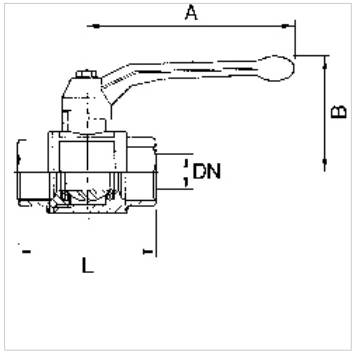

Napomena

Ostali podaci na upit.

Artikal

Naziv	DN	Navoj	A (mm)	B (mm)	L (mm)
K- 07 30 00 81	8	G 1/4	85,0	42,0	39,0
K- 07 30 00 85	10	G 3/8	85,0	42,0	43,0
K- 07 30 00 89	15	G 1/2	85,0	46,0	50,0
K- 07 30 00 93	20	G 3/4	105,0	53,0	58,0
K- 07 30 00 97	25	G 1	105,0	57,0	69,0
K- 07 30 01 01	32	G 1 1/4	130,0	70,0	81,0
K- 07 30 01 05	40	G 1 1/2	130,0	76,0	93,0
K- 07 30 01 09	50	G 2	165,0	92,0	110,0

Uprkos pažljivom proveravanju, ne možemo isključiti greške i ne preuzimamo nikakvu garanciju za navedene podatke.