K-ZFL ABSP-KLAPPEN DOPPEL

Butterfly valves, with double-acting actuator, min. pilot pressure 5 bar

HANSA FLEX

Osobine

Konstrukcija	Pneumatic actuators, in double- or single acting version
Radni pritisak	Max. 16 bar
Radna temperatura	-15 °C to +120 °C
Mediji	Water / steam, salt water, salt water, ester, ketone, alkali, caustic soda, sodium hydroxide. Not recommended for hydrocarbons
Upravljački pritisak	5.5 bar
Adapter ventila	Supplied as standard, operated by a 3/2- or 5/2-way valve
Ugao obrtanja	90 °
Pogon	aluminium eloxed
Zaptivka pogona	NBR
Kućište	Grey cast iron GG25 epoxy resin coated, RAL 5015
Zaptivka	EPDM
Osovina	SS416
Zaptivka osovine	EPDM
Upravljanje	



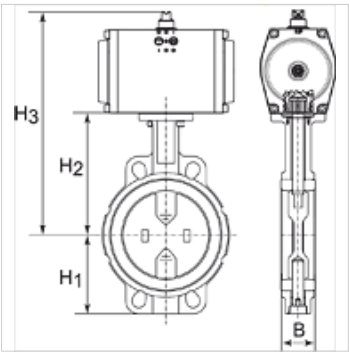

Napomena

Ostali podaci na upit.

Artikal

Naziv	Ploča	DN	B (mm)	H1 (mm)	H2 (mm)	H3 (mm)	L (mm)
K- 07 30 03 28	Stainless Steel CF8M/1.4404	40	38,0	68,0	108,0	212,0	94,0
K- 07 30 03 29	Stainless Steel CF8M/1.4404	50	47,0	71,0	143,0	247,0	100,0
K- 07 30 03 30	Stainless Steel CF8M/1.4404	65	49,0	78,0	155,0	259,0	115,0
K- 07 30 03 31	Stainless Steel CF8M/1.4404	80	47,0	89,0	162,0	280,0	127,0
K- 07 30 03 32	Stainless Steel CF8M/1.4404	100	56,0	102,0	178,0	308,0	163,0
K- 07 30 03 33	Stainless Steel CF8M/1.4404	125	59,0	123,0	191,0	321,0	190,0
K- 07 30 03 35	Stainless Steel CF8M/1.4404	150	59,0	138,0	205,0	352,0	216,0

Uprkos pažljivom proveravanju, ne možemo isključiti greške i ne preuzimamo nikakvu garanciju za navedene podatke.