K-BKR ELK 230 VAC MS

Brass ball valves with electric actuator 230 VAC, 50 Hz

HANSA-FLEX

Osobine

Radni pritisak	DN 15 - DN 32: max. 40 bar; DN 40 - DN 50: max. 25 bar
Radna temperatura	-20 °C to +70 °C
Radni ciklus	ED 30 %
Vlažnost vazduha	30 % to 95 %
Položaji elementa za uključivanje	Manually operated
Klasa zaštite	IP 67
Vreme podešavanja	13 sec. = 230 VAC, 50 Hz 15 sec. = 24 VDC
Temperatura okoline	-30 °C to +70 °C
Montažna prirubnica	ISO 5211
Kućište	Aluminium, powder-coated
Kuglični ventil	brass nickel plated
Kugla, preklopno vratilo	Chrome-plated brass
Zaptivka kugle	PTFE, glass fibre-reinforced
Zaptivka komutacione osovine	FKM



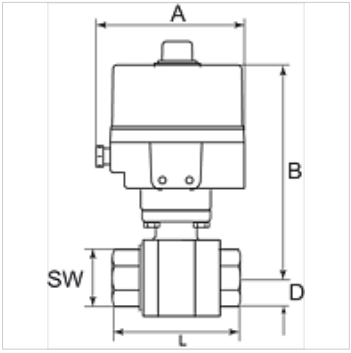

Napomena

Ostali podaci na upit.

Opis

Voltage range 230 VAC, 50 Hz or 24 VDC. 2-way cock, full bore, for neutral gases and liquids.
Reversible electric rotary actuator.

Artikal

Naziv	DN	Navoj	A (mm)	B (mm)	D (mm)	L (mm)	SW (mm)
K- 07 30 20 64	15	Rp 1/2	152,0	189,0	17,0	75,0	26
K- 07 30 20 65	20	Rp 3/4	152,0	192,0	20,0	80,0	32
K- 07 30 20 66	25	Rp 1	152,0	195,0	25,0	90,0	41
K- 07 30 20 67	32	Rp 1 1/4	152,0	206,0	30,0	110,0	50
K- 07 30 20 68	40	Rp 1 1/2	152,0	213,0	36,0	120,0	55
K- 07 30 20 69	50	Rp 2	152,0	224,0	45,0	140,0	70

Uprkos pažljivom proveravanju, ne možemo isključiti greške i ne preuzimamo nikakvu garanciju za navedene podatke.