K-FI AK KOH PC-BEHAEL VARIOBLOC

Activated carbon filters with polycarbonate bowl

Osobine

Ulazni pritisak	Max. 16 bar (polycarbonate bowl), Max. 20 bar (metal bowl)
Temperatura medija	max. 50 °C
Temperatura okoline	Max. 50 °C (polycarbonate bowl), Max. 80 °C (metal bowl)
Kvalitet vazduha ISO 85731	Class 1 dirt, class 1 oil
Sadržaj preostalog ulja	0,003 mg/m3
Merenje vrednosti protoka	At P1 = 7 bar and pressure drop Δp = 0,1 bar



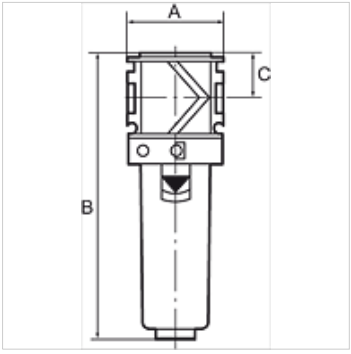

Napomena

Activated carbon filters are also supplied with protective cage or metal container.
Ostali podaci na upit.

Opis

The activated carbon filter absorbs oil vapour from the compressed air. The entering compressed air needs to be dry and free of contaminants (an upstream microfilter is strongly recommended).

Artikal

Naziv	Navoj	Protok (L/min)	A (mm)	B	C (mm)
K- 07 25 19 59	G 1/4	800	48,0	142,0 mm	22,0
K- 07 25 19 60	G 3/8	1000	48,0	142,0 mm	22,0
K- 07 25 19 61	G 1/2	1200	70,0	193,0 mm	26,0
K- 07 25 19 62	G 3/4	1300	70,0	193,0 mm	26,0
K- 07 25 19 63	G 1	1300	124,0	193,0 mm	26,0

Uprkos pažljivom proveravanju, ne možemo isključiti greške i ne preuzimamo nikakvu garanciju za navedene podatke.