K-KLEMMBUEGEL IG

Clamp strap with female thread

Osobine

Materijal	nickel plated iron



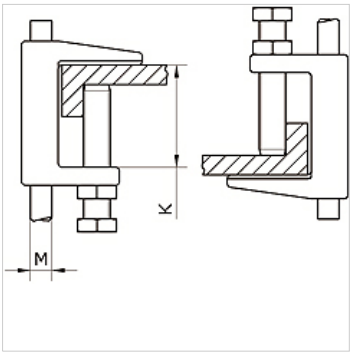

Artikal

Naziv	Navoj	K (mm)
K- 07 40 54 92	M 8	18