AOVN VA
Blok Bağlantı

Özellikler

Bağlantı 1	NPT dış diş
Sızdırmazlık şekli 1	dişten contalama
Bağlantı 2	metrik Somunlu
Sızdırmazlık şekli 2	O-Ringli 24° dışa havşalı
Model	Blok Bağlantı
Dizayn	düz
Standart	DIN 2353 ISO 8434-1
Malzeme	Paslanmaz çelik



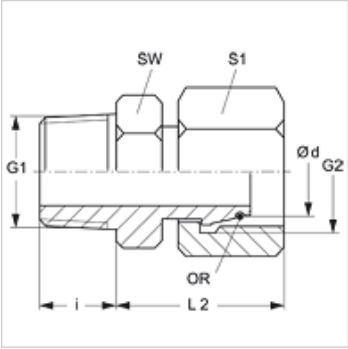

Ürün

Tanım	Tip	Çalışma basıncı bar	Ø d (mm)	G1	G2	i (mm)	L2 (mm)	SW (mm)	S1	OR
AOVN NW 04 L VA	L	PN 315	6	1/8" -27 NPT	M 12 x 1,5	10,0	31,5	11	14	4,0 x 1,5
AOVN NW 04 L 1/4 VA	L	PN 315	6	1/4" -18 NPT	M 12 x 1,5	15,0	37,0	14	14	4,0 x 1,5
AOVN NW 06 L VA	L	PN 315	8	1/4" -18 NPT	M 14 x 1,5	14,5	37,5	14	17	6,0 x 1,5
AOVN NW 08 L VA	L	PN 315	10	1/4" -18 NPT	M 16 x 1,5	14,5	38,0	14	19	7,5 x 1,5
AOVN NW 08 L 3/8 VA	L	PN 315	10	3/8" -18 NPT	M 16 x 1,5	15,3	43,0	19	19	7,5 x 1,5
AOVN NW 10 L 1/4VA	L	PN 315	12	1/4" -18 NPT	M 18 x 1,5	15,0	40,0	17	22	9,0 x 1,5
AOVN NW 10 L VA	L	PN 315	12	3/8" -18 NPT	M 18 x 1,5	14,5	40,0	19	22	9,0 x 1,5
AOVN NW 10 L 1/2 VA	L	PN 315	12	1/2" -14 NPT	M 18 x 1,5	20,0	47,0	22	22	9,0 x 1,5
AOVN NW 13 L VA	L	PN 315	15	1/2" -14 NPT	M 22 x 1,5	19,5	49,5	22	27	12,0 x 2,0
AOVN NW 16 L VA	L	PN 315	18	1/2" -14 NPT	M 26 x 1,5	19,5	49,0	24	32	15,0 x 2,0
AOVN NW 20 L 1/2 VA	L	PN 160	22	1/2" -14 NPT	M 30 x 2	20,0	50,0	27	36	20,0 x 2,0
AOVN NW 20 L VA	L	PN 160	22	3/4" -14 NPT	M 30 x 2	19,5	52,0	27	36	20,0 x 2,0
AOVN NW 25 L VA	L	PN 160	28	1" -11,5 NPT	M 36 x 2	24,5	61,0	36	41	26,0 x 2,0
AOVN NW 32 L VA	L	PN 160	35	1.1/4" -11,5 NPT	M 45 x 2	25,0	65,5	46	50	32,0 x 2,5
AOVN NW 40 L VA	L	PN 160	42	1.1/2" -11,5 NPT	M 52 x 2	26,0	68,5	50	60	38,0 x 2,5
AOVN NW 03 S VA	S	PN 630	6	1/4" -18 NPT	M 14 x 1,5	14,5	37,5	14	17	4,0 x 1,5
AOVN NW 04 S VA	S	PN 630	8	1/4" -18 NPT	M 16 x 1,5	14,5	38,0	14	19	6,0 x 1,5
AOVN NW 06 S VA	S	PN 630	10	3/8" -18 NPT	M 18 x 1,5	14,5	40,5	19	22	7,5 x 1,5
AOVN NW 08 S VA	S	PN 630	12	3/8" -18 NPT	M 20 x 1,5	14,5	42,0	19	24	9,0 x 1,5
AOVN NW 08 S 1/4 VA	S	PN 630	12	1/4" -18 NPT	M 20 x 1,5	15,0	41,5	17	24	9,0 x 1,5
AOVN NW 08 S 1/2 VA	S	PN 630	12	1/2" -14 NPT	M 20 x 1,5	20,0	48,0	22	24	9,0 x 1,5
AOVN NW 10 S VA	S	PN 630	14	1/2" -14 NPT	M 22 x 1,5	19,5	50,5	22	27	10,0 x 2,0
AOVN NW 13 S 3/8 VA	S	PN 400	16	3/8" -18 NPT	M 24 x 1,5	15,3	45,0	22	30	12,0 x 2,0
AOVN NW 13 S VA	S	PN 400	16	1/2" -14 NPT	M 24 x 1,5	19,5	51,0	22	30	12,0 x 2,0
AOVN NW 13 S 3/4 VA	S	PN 400	16	3/4" -14 NPT	M 24 x 1,5	20,0	49,0	27	30	12,0 x 2,0
AOVN NW 16 S VA	S	PN 400	20	3/4" -14 NPT	M 30 x 2	19,5	54,0	27	36	16,3 x 2,4
AOVN NW 20 S VA	S	PN 400	25	1" -11,5 NPT	M 36 x 2	24,5	63,5	36	46	20,3 x 2,4
AOVN NW 25 S VA	S	PN 400	30	1.1/4" -11,5 NPT	M 42 x 2	25,0	70,5	46	50	25,3 x 2,4
AOVN NW 32 S VA	S	PN 315	38	1.1/2" -11,5 NPT	M 52 x 2	26,0	73,5	50	60	33,3 x 2,4

Model: LL = Çok hafif L = Hafif S = Ağır – PN=Çalışma Basıncı PB=Patlama Basıncı – çap d = Boru dış çapı

Ürün türleri

AOVN	Blok Bağlantı, Çelik

Titiz kontrole rağmen hatalar önlenemez ve sorumluluk altında bırakmayan bilgiler hakkında hiçbir sorumluluk kabul edilmez.