VM
Blok Bağlantı

Özellikler

Bağlantı 1	metrik dış diş, silindirik
Sızdırmazlık şekli 1	Form B
Bağlantı 2	metrik dış diş, silindirik
Sızdırmazlık şekli 2	24° içe havşalı
Model	Blok Bağlantı
Dizayn	düz
Standart	DIN 2353 ISO 8434-1
Teslimat kapsamı	Gövde (Somun ve Yüzüklü)
Malzeme	Çelik
Yüzey koruması	galvaniz kaplı



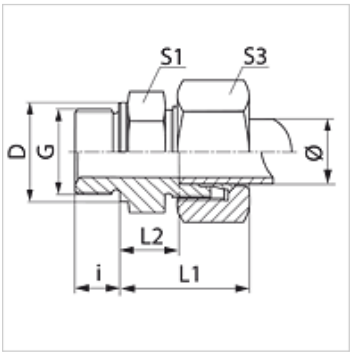

Açıklama

Montaj, Basınç Değeri ve izin verilen Çalışma Sıcaklıkları ile ilgili Bilgiler için Lütfen Boru Bağlantı Teknik Bilgilerine Bakınız.

Ürün

Tanım	Tip	Çalışma basıncı bar	Borunun dış çapı (mm)	G	TR (mm)	i (mm)	L1 (mm)	L2 (mm)	S1	S3
VM 16 LL	LL	PN 100	16	M 22 x 1,5	27	14	44,0	15,0	27	27
VM 16 LL 16-1.5	LL	PN 100	16	M 16 x 1,5	21	12	40,5	13,5	24	27
VM 16 LL 18-1.5	LL	PN 100	16	M 18 x 1,5	23	12	40,5	13,5	24	27
VM NW 04 HL	L	PN 315	6	M 10 x 1	14	8	23,0	8,5	14	14
VM NW 04 HL 12	L	PN 315	6	M 12 x 1,5	17	12	25,0	10,0	17	14
VM NW 04 HL 14	L	PN 315	6	M 14 x 1,5	19	12	25,0	10,0	19	14
VM NW 04 HL 16	L	PN 315	6	M 16 x 1,5	21	12	25,0	11,5	22	14
VM NW 04 HL 18	L	PN 315	6	M 18 x 1,5	23	12	24,5	11,5	24	14
VM NW 04 HL 22	L	PN 315	6	M 22 x 1,5	27	14	28,0	13,0	27	14
VM NW 06 HL	L	PN 315	8	M 12 x 1,5	17	12	25,0	10,0	17	17
VM NW 06 HL 10	L	PN 315	8	M 10 x 1	17	8	25,0	10,0	17	17
VM NW 06 HL 14	L	PN 315	8	M 14 x 1,5	19	12	25,0	10,0	19	17
VM NW 06 HL 16	L	PN 315	8	M 16 x 1,5	21	12	26,0	11,5	22	17
VM NW 06 HL 18	L	PN 315	8	M 18 x 1,5	23	12	26,0	11,5	24	17
VM NW 06 HL 22	L	PN 315	8	M 22 x 1,5	27	14	28,0	13,0	27	17
VM NW 08 HL	L	PN 315	10	M 14 x 1,5	19	12	26,0	11,0	19	19
VM NW 08 HL 12	L	PN 315	10	M 12 x 1,5	17	12	26,0	11,0	17	19
VM NW 08 HL 16	L	PN 315	10	M 16 x 1,5	22	12	27,5	12,5	22	19
VM NW 08 HL 18	L	PN 315	10	M 18 x 1,5	23	12	27,5	12,5	24	19
VM NW 08 HL 22	L	PN 315	10	M 22 x 1,5	27	14	29,0	14,0	27	19
VM NW 10 HL	L	PN 315	12	M 16 x 1,5	21	12	27,0	12,5	22	22
VM NW 10 HL 12	L	PN 315	12	M 12 x 1,5	17	12	26,0	11,0	19	22
VM NW 10 HL 14	L	PN 315	12	M 14 x 1,5	19	12	27,0	12,5	22	22
VM NW 10 HL 18	L	PN 315	12	M 18 x 1,5	23	12	27,0	12,5	24	22
VM NW 10 HL 22	L	PN 315	12	M 22 x 1,5	27	14	28,5	14,0	27	22
VM NW 10 HL 24	L	PN 315	12	M 24 x 1,5	27	14	28,5	14,0	27	22
VM NW 10 HL 26	L	PN 315	12	M 26 x 1,5	27	14	28,5	14,0	27	22
VM NW 13 HL	L	PN 315	15	M 18 x 1,5	23	12	29,0	13,5	24	27
VM NW 13 HL 14	L	PN 315	15	M 14 x 1,5	19	12	29,0	13,5	24	27
VM NW 13 HL 16	L	PN 315	15	M 16 x 1,5	21	12	29,0	13,5	24	27
VM NW 13 HL 22	L	PN 315	15	M 22 x 1,5	27	14	30,5	15,0	27	27
VM NW 13 HL 26	L	PN 315	15	M 26 x 1,5	31	16	30,5	15,0	32	27
VM NW 13 HL 30	L	PN 315	15	M 30 x 2	39	16	30,5	15,0	41	27
VM NW 16 HL	L	PN 315	18	M 22 x 1,5	27	14	31,0	14,5	27	32
VM NW 16 HL 18	L	PN 315	18	M 18 x 1,5	23	12	30,5	14,0	27	32
VM NW 16 HL 26	L	PN 315	18	M 26 x 1,5	31	16	31,0	14,5	32	32
VM NW 16 HL 27	L	PN 315	18	M 27 x 2	31	16	31,0	14,5	32	32
VM NW 16 HL 30-1.5	L	PN 315	18	M 30 x 1,5	39	16	31,0	15,0	41	27
VM NW 20 HL	L	PN 160	22	M 26 x 1,5	31	16	33,0	16,5	32	36
VM NW 20 HL 18	L	PN 160	22	M 18 x 1,5	27	14	31,0	14,5	27	36
VM NW 20 HL 22	L	PN 160	22	M 22 x 1,5	27	14	33,0	16,5	32	36
VM NW 20 HL 30-1.5	L	PN 160	22	M 30 x 1,5	39	14	33,0	16,5	41	36

Titiz kontrole rağmen hatalar önlenemez ve sorumluluk altında bırakmayan bilgiler hakkında hiçbir sorumluluk kabul edilmez.

Ürün

Tanım	Tip	Çalışma basıncı bar	Borunun dış çapı (mm)	G	TR (mm)	i (mm)	L1 (mm)	L2 (mm)	S1	S3
VM NW 25 HL	L	PN 160	28	M 33 x 2	39	18	34,0	17,5	41	41
VM NW 25 HL 22	L	PN 160	28	M 22 x 1,5	27	18	34,0	17,5	32	41
VM NW 25 HL 26	L	PN 160	28	M 26 x 1,5	31	16	34,0	17,5	41	41
VM NW 25 HL 27	L	PN 160	28	M 27 x 2	39	20	34,0	17,5	41	41
VM NW 25 HL 42	L	PN 160	28	M 42 x 2	55	22	34,0	19,0	55	41
VM NW 32 HL	L	PN 160	35	M 42 x 2	49	20	39,0	17,5	50	50
VM NW 40 HL	L	PN 160	42	M 48 x 2	55	22	42,0	19,0	55	60
VM NW 03 HS	S	PN 400	6	M 12 x 1,5	17	12	28,0	13,0	17	17
VM NW 03 HS 16	S	PN 400	6	M 16 x 1,5	21	12	28,0	13,0	17	17
VM NW 03 HS 18	S	PN 400	6	M 18 x 1,5	27	14	28,0	13,0	19	17
VM NW 03 HS 22	S	PN 400	6	M 22 x 1,5	25	14	28,0	13,0	19	17
VM NW 04 HS	S	PN 400	8	M 14 x 1,5	19	12	30,0	15,0	19	19
VM NW 06 HS	S	PN 400	10	M 16 x 1,5	21	12	31,0	15,0	22	22
VM NW 06 HS 18	S	PN 400	10	M 18 x 1,5	27	14	31,0	15,0	22	22
VM NW 06 HS 22	S	PN 400	10	M 22 x 1,5	27	14	31,0	15,0	24	22
VM NW 08 HS	S	PN 400	12	M 18 x 1,5	23	12	33,0	17,0	24	24
VM NW 08 HS 14	S	PN 400	12	M 14 x 1,5	21	12	33,0	17,0	19	24
VM NW 08 HS 16	S	PN 400	12	M 16 x 1,5	21	12	29,0	17,0	24	24
VM NW 08 HS 22	S	PN 400	12	M 22 x 1,5	27	14	33,5	17,5	27	24
VM NW 10 HS	S	PN 400	14	M 20 x 1,5	25	14	37,0	19,0	27	27
VM NW 10 HS 16	S	PN 400	14	M 16 x 1,5	21	12	37,0	19,0	24	27
VM NW 10 HS 18	S	PN 400	14	M 18 x 1,5	27	14	37,0	19,0	24	27
VM NW 10 HS 22	S	PN 400	14	M 22 x 1,5	27	14	37,0	19,0	27	27
VM NW 13 HS	S	PN 400	16	M 22 x 1,5	27	14	37,0	18,5	27	30
VM NW 13 HS 16	S	PN 400	16	M 16 x 1,5	21	12	37,0	18,5	24	30
VM NW 13 HS 18	S	PN 400	16	M 18 x 1,5	23	12	37,0	18,5	27	30
VM NW 13 HS 26	S	PN 400	16	M 26 x 1,5	32	16	37,0	18,5	32	30
VM NW 16 HS	S	PN 400	20	M 27 x 2	32	16	42,0	20,5	32	36
VM NW 16 HS 22	S	PN 400	20	M 22 x 1,5	27	14	42,0	20,5	32	36
VM NW 16 HS 30-1.5	S	PN 400	20	M 30 x 1,5	39	18	42,0	20,5	36	36
VM NW 20 HS	S	PN 250	25	M 33 x 2	39	18	47,0	23,0	41	46
VM NW 20 HS 27	S	PN 250	25	M 27 x 2	32	16	47,0	23,0	41	46
VM NW 25 HS	S	PN 160	30	M 42 x 2	49	20	50,0	23,5	50	50
VM NW 32 HS	S	PN 160	38	M 48 x 2	55	22	57,0	26,0	55	60

Model: LL = Çok hafif L = Hafif S = Ağır – PN=Çalışma Basınçı PB=Patlama Basınçı – çap = Boru dış çapı

Ürün türleri

VM MG	Blok Bağlantı, Pirinç
VM VA	Blok Bağlantı, Paslanmaz çelik
XVM	Blok Bağlantı, Çelik

Titiz kontrole rağmen hatalar önlenemez ve sorumluluk altında bırakmayan bilgiler hakkında hiçbir sorumluluk kabul edilmez.