# VR
Blok Bağlantı

HANSA-FLEX

## Özellikler

| | |
|---|---|
| **Bağlantı 1** | BSP dış diş silindirik |
| **Sızdırmazlık şekli 1** | Form B |
| **Bağlantı 2** | metrik dış diş, silindirik |
| **Sızdırmazlık şekli 2** | 24° içe havşalı |
| **Model** | Blok Bağlantı |
| **Dizayn** | düz |
| **Standart** | DIN 2353<br>ISO 8434-1 |
| **Teslimat kapsamı** | Gövde (Somun ve Yüzüklü) |
| **Malzeme** | Çelik |
| **Yüzey koruması** | galvaniz kaplı |



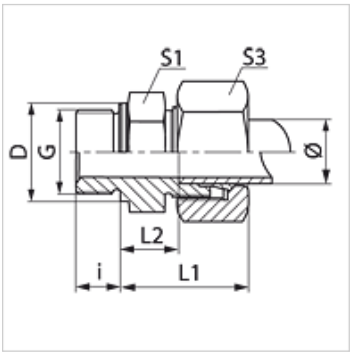


## Açıklama

Montaj, Basınç Değeri ve izin verilen Çalışma Sıcaklıkları ile ilgili Bilgiler için Lütfen Boru Bağlantı Teknik Bilgilerine Bakınız.

## Ürün

| Tanım | Tip | Çalışma basıncı bar | Borunun dış çapı (mm) | G | TR (mm) | i (mm) | L1 (mm) | L2 (mm) | S1 | S3 |
|---|---|---|---|---|---|---|---|---|---|---|
| **VR NW 04 HL** | L | PN 315 | 6 | G 1/8" -28 | 14 | 8 | 23,0 | 8,5 | 14 | 14 |
| **VR NW 04 HL 1/4** | L | PN 315 | 6 | G 1/4" -19 | 18 | 12 | 24,5 | 10,0 | 19 | 14 |
| **VR NW 04 HL 3/8** | L | PN 315 | 6 | G 3/8" -19 | 22 | 12 | 26,0 | 11,5 | 22 | 14 |
| **VR NW 04 HL 1/2** | L | PN 315 | 6 | G 1/2" -14 | 26 | 14 | 26,5 | 12,0 | 27 | 14 |
| **VR NW 06 HL 1/8** | L | PN 315 | 8 | G 1/8" -28 | 14 | 8 | 24,0 | 9,0 | 14 | 17 |
| **VR NW 06 HL** | L | PN 315 | 8 | G 1/4" -19 | 18 | 12 | 25,0 | 10,0 | 19 | 17 |
| **VR NW 06 HL 3/8** | L | PN 315 | 8 | G 3/8" -19 | 22 | 12 | 26,5 | 11,5 | 22 | 17 |
| **VR NW 06 HL 1/2** | L | PN 315 | 8 | G 1/2" -14 | 26 | 14 | 27,0 | 12,0 | 27 | 17 |
| **VR NW 08 HL 1/8** | L | PN 315 | 10 | G 1/8" -28 | 14 | 8 | 25,5 | 10,5 | 17 | 19 |
| **VR NW 08 HL** | L | PN 315 | 10 | G 1/4" -19 | 18 | 12 | 26,0 | 11,0 | 19 | 19 |
| **VR NW 08 HL 3/8** | L | PN 315 | 10 | G 3/8" -19 | 22 | 12 | 27,5 | 12,5 | 22 | 19 |
| **VR NW 08 HL 1/2** | L | PN 315 | 10 | G 1/2" -14 | 26 | 14 | 28,0 | 13,0 | 27 | 19 |
| **VR NW 10 HL 1/8** | L | PN 315 | 12 | G 1/8" -28 | 14 | 8 | 27,0 | 12,0 | 17 | 22 |
| **VR NW 10 HL 1/4** | L | PN 315 | 12 | G 1/4" -19 | 18 | 12 | 26,5 | 12,0 | 19 | 22 |
| **VR NW 10 HL** | L | PN 315 | 12 | G 3/8" -19 | 22 | 12 | 27,0 | 12,5 | 22 | 22 |
| **VR NW 10 HL 1/2** | L | PN 315 | 12 | G 1/2" -14 | 26 | 14 | 27,5 | 13,0 | 27 | 22 |
| **VR NW 10 HL 3/4** | L | PN 315 | 12 | G 3/4" -14 | 32 | 16 | 28,5 | 14,0 | 32 | 22 |
| **VR NW 13 HL 1/4** | L | PN 315 | 15 | G 1/4" -19 | 18 | 12 | 29,0 | 14,0 | 19 | 27 |
| **VR NW 13 HL 3/8** | L | PN 315 | 15 | G 3/8" -19 | 22 | 12 | 29,0 | 14,0 | 24 | 27 |
| **VR NW 13 HL** | L | PN 315 | 15 | G 1/2" -14 | 26 | 14 | 29,0 | 14,0 | 27 | 27 |
| **VR NW 13 HL 3/4** | L | PN 315 | 15 | G 3/4" -14 | 32 | 16 | 30,0 | 15,0 | 32 | 27 |
| **VR NW 16 HL 3/8** | L | PN 315 | 18 | G 3/8" -19 | 22 | 12 | 30,5 | 14,0 | 27 | 32 |
| **VR NW 16 HL** | L | PN 315 | 18 | G 1/2" -14 | 26 | 14 | 31,0 | 14,5 | 27 | 32 |
| **VR NW 16 HL 3/4** | L | PN 315 | 18 | G 3/4" -14 | 32 | 16 | 31,0 | 14,5 | 32 | 32 |
| **VR NW 16 HL 1** | L | PN 315 | 18 | G 1" -11 | 39 | 18 | 31,0 | 17,5 | 41 | 32 |
| **VR NW 20 HL 1/2** | L | PN 160 | 22 | G 1/2" -14 | 26 | 14 | 33,0 | 16,5 | 32 | 36 |
| **VR NW 20 HL** | L | PN 160 | 22 | G 3/4" -14 | 32 | 16 | 33,0 | 16,5 | 32 | 36 |
| **VR NW 20 HL 1** | L | PN 160 | 22 | G 1" -11 | 39 | 18 | 34,0 | 17,5 | 41 | 36 |
| **VR NW 25 HL 1/2** | L | PN 160 | 28 | G 1/2" -14 | 26 | 14 | 33,0 | 18,5 | 41 | 41 |
| **VR NW 25 HL 3/4** | L | PN 160 | 28 | G 3/4" -14 | 32 | 16 | 34,0 | 17,5 | 41 | 41 |
| **VR NW 25 HL** | L | PN 160 | 28 | G 1" -11 | 39 | 18 | 34,0 | 17,5 | 41 | 41 |
| **VR NW 25 HL 1 1/4** | L | PN 160 | 28 | G 1.1/4" -11 | 49 | 20 | 39,0 | 17,5 | 50 | 41 |
| **VR NW 32 HL 3/4** | L | PN 160 | 35 | G 3/4" -14 | 32 | 16 | 39,0 | 17,5 | 41 | 50 |
| **VR NW 32 HL 1** | L | PN 160 | 35 | G 1" -11 | 39 | 18 | 40,0 | 18,5 | 50 | 50 |
| **VR NW 32 HL** | L | PN 160 | 35 | G 1.1/4" -11 | 49 | 20 | 39,0 | 17,5 | 50 | 50 |
| **VR NW 32 HL 1 1/2** | L | PN 160 | 35 | G 1.1/2" -11 | 55 | 22 | 40,0 | 19,0 | 55 | 50 |
| **VR NW 40 HL 1 1/4** | L | PN 160 | 42 | G 1.1/4" -11 | 49 | 20 | 42,0 | 17,5 | 50 | 60 |
| **VR NW 40 HL** | L | PN 160 | 42 | G 1.1/2" -11 | 55 | 22 | 42,0 | 19,0 | 55 | 60 |
| | | | | | | | | | | |
| **VR NW 03 HS 1/8** | S | PN 400 | 6 | G 1/8" -28 | 14 | 8 | 28,0 | 12,0 | 17 | 17 |
| **VR NW 03 HS** | S | PN 400 | 6 | G 1/4" -19 | 18 | 12 | 28,0 | 13,0 | 19 | 17 |
| **VR NW 03 HS 3/8** | S | PN 400 | 6 | G 3/8" -19 | 22 | 12 | 32,5 | 17,5 | 22 | 17 |
| **VR NW 03 HS 1/2** | S | PN 400 | 6 | G 1/2" -14 | 26 | 14 | 33,0 | 18,0 | 27 | 17 |

*Titiz kontrole rağmen hatalar önlenemez ve sorumluluk altında bırakmayan bilgiler hakkında hiçbir sorumluluk kabul edilmez.*

## Ürün

| Tanım | Tip | Çalışma basıncı bar | Borunun dış çapı (mm) | G | TR (mm) | i (mm) | L1 (mm) | L2 (mm) | S1 | S3 |
|---|---|---|---|---|---|---|---|---|---|---|
| **VR NW 04 HS** | S | PN 400 | 8 | G 1/4" -19 | 18 | 12 | 30,0 | 15,0 | 19 | 19 |
| **VR NW 04 HS 3/8** | S | PN 400 | 8 | G 3/8" -19 | 22 | 12 | 30,5 | 15,5 | 22 | 19 |
| **VR NW 04 HS 1/2** | S | PN 400 | 8 | G 1/2" -14 | 26 | 14 | 34,0 | 17,5 | 27 | 19 |
| **VR NW 06 HS 1/4** | S | PN 400 | 10 | G 1/4" -19 | 18 | 12 | 30,5 | 14,5 | 22 | 22 |
| **VR NW 06 HS** | S | PN 400 | 10 | G 3/8" -19 | 22 | 12 | 31,0 | 15,0 | 22 | 22 |
| **VR NW 06 HS 1/2** | S | PN 400 | 10 | G 1/2" -14 | 26 | 14 | 33,5 | 17,5 | 27 | 22 |
| **VR NW 08 HS 1/4** | S | PN 400 | 12 | G 1/4" -19 | 18 | 12 | 32,5 | 16,5 | 22 | 24 |
| **VR NW 08 HS** | S | PN 400 | 12 | G 3/8" -19 | 22 | 12 | 33,0 | 17,0 | 22 | 24 |
| **VR NW 08 HS 1/2** | S | PN 400 | 12 | G 1/2" -14 | 26 | 14 | 33,5 | 17,5 | 27 | 24 |
| **VR NW 08 HS 3/4** | S | PN 400 | 12 | G 3/4" -14 | 32 | 16 | 35,0 | 19,0 | 32 | 24 |
| **VR NW 10 HS 3/8** | S | PN 400 | 14 | G 3/8" -19 | 22 | 12 | 36,5 | 18,5 | 24 | 27 |
| **VR NW 10 HS** | S | PN 400 | 14 | G 1/2" -14 | 26 | 14 | 37,0 | 19,0 | 27 | 27 |
| **VR NW 10 HS 3/4** | S | PN 400 | 14 | G 3/4" -14 | 32 | 16 | 36,5 | 18,5 | 32 | 27 |
| **VR NW 13 HS 1/4** | S | PN 400 | 16 | G 1/4" -19 | 22 | 12 | 37,0 | 18,5 | 27 | 30 |
| **VR NW 13 HS 3/8** | S | PN 400 | 16 | G 3/8" -19 | 22 | 12 | 37,0 | 18,5 | 27 | 30 |
| **VR NW 13 HS** | S | PN 400 | 16 | G 1/2" -14 | 26 | 14 | 37,0 | 18,5 | 27 | 30 |
| **VR NW 13 HS 3/4** | S | PN 400 | 16 | G 3/4" -14 | 32 | 16 | 39,0 | 20,5 | 32 | 30 |
| **VR NW 16 HS 1/2** | S | PN 400 | 20 | G 1/2" -14 | 26 | 14 | 44,0 | 22,5 | 32 | 36 |
| **VR NW 16 HS** | S | PN 400 | 20 | G 3/4" -14 | 39 | 18 | 44,0 | 22,5 | 32 | 36 |
| **VR NW 16 HS 1** | S | PN 250 | 20 | G 1" -11 | 39 | 18 | 42,0 | 17,5 | 41 | 36 |
| **VR NW 20 HS 1/2** | S | PN 250 | 25 | G 1/2" -14 | 26 | 14 | 47,0 | 26,5 | 41 | 46 |
| **VR NW 20 HS 3/4** | S | PN 250 | 25 | G 3/4" -14 | 32 | 16 | 47,0 | 23,0 | 41 | 46 |
| **VR NW 20 HS** | S | PN 250 | 25 | G 1" -11 | 39 | 18 | 47,0 | 23,0 | 41 | 46 |
| **VR NW 20 HS 1 1/4** | S | PN 160 | 25 | G 1.1/4" -11 | 49 | 20 | 47,0 | 23,0 | 50 | 46 |
| **VR NW 25 HS 3/4** | S | PN 160 | 30 | G 3/4" -14 | 32 | 16 | 50,0 | 23,5 | 46 | 50 |
| **VR NW 25 HS 1** | S | PN 160 | 30 | G 1" -11 | 39 | 18 | 50,0 | 23,5 | 46 | 50 |
| **VR NW 25 HS 1 1/2** | S | PN 160 | 30 | G 1.1/2" -11 | 55 | 22 | 50,0 | 23,5 | 55 | 50 |
| **VR NW 25 HS** | S | PN 160 | 30 | G 1.1/4" -11 | 49 | 20 | 50,0 | 23,5 | 50 | 50 |
| **VR NW 32 HS 1** | S | PN 160 | 38 | G 1" -11 | 39 | 18 | 57,0 | 26,0 | 55 | 60 |
| **VR NW 32 HS 1 1/4** | S | PN 160 | 38 | G 1.1/4" -11 | 49 | 20 | 57,0 | 26,0 | 55 | 60 |
| **VR NW 32 HS** | S | PN 160 | 38 | G 1.1/2" -11 | 55 | 22 | 57,0 | 26,0 | 55 | 60 |

Model: LL = Çok hafif  L = Hafif  S = Ağır – PN=Çalışma Basınçı  PB=Patlama Basınçı – çap = Boru dış çapı

## Ürün türleri

| | |
|---|---|
| **VR MG** | Blok Bağlantı, Pirinç |
| **VR VA** | Blok Bağlantı, Paslanmaz çelik |
| **XVR** | Blok Bağlantı, Çelik |

*Titiz kontrole rağmen hatalar önlenemez ve sorumluluk altında bırakmayan bilgiler hakkında hiçbir sorumluluk kabul edilmez.*