VR ED VA
Blok Bağlantı

HANSA-FLEX

Özellikler

Bağlantı 1	BSP dış diş silindirik
Sızdırmazlık şekli 1	Form E
Bağlantı 2	metrik dış diş, silindirik
Sızdırmazlık şekli 2	24° içe havşalı
Model	Blok Bağlantı
Dizayn	düz
Standart	DIN 2353 ISO 8434-1
Teslimat kapsamı	Gövde (Somun ve Yüzüklü)
Malzeme	Paslanmaz çelik



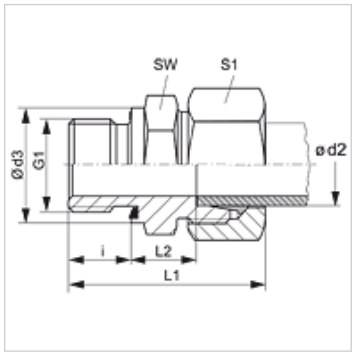

Açıklama

Montaj, Basınç Değeri ve izin verilen Çalışma Sıcaklıkları ile ilgili Bilgiler için Lütfen Boru Bağlantı Teknik Bilgilerine Bakınız.

Siparişle ilgili bilgiler

NBR contalar
Istek üzerine FPM (Viton)

Ürün

Tanım	Tip	Çalışma basıncı bar	Ø d2 (mm)	G1	Ø d3 (mm)	i (mm)	L1 (mm)	L2 (mm)	SW (mm)	S1
VR NW 04 HL ED VA	L	PN 315	6	G 1/8" -28	14,0	8	31,0	8,5	14	14
VR NW 04 HL 1/4 ED VA	L	PN 315	6	G 1/4" -19	18,7	12	39,0	10,0	19	14
VR NW 04 HL 3/8 ED VA	L	PN 315	6	G 3/8" -19	22,0	12	39,0	11,5	22	14
VR NW 04 HL 1/2 ED VA	L	PN 315	6	G 1/2" -14	27,0	14	43,0	12,0	27	14
VR NW 06 HL 1/8 ED VA	L	PN 315	8	G 1/8" -28	14,0	8	34,0	9,5	14	17
VR NW 06 HL ED VA	L	PN 315	8	G 1/4" -19	18,7	12	37,0	10,0	19	17
VR NW 06 HL 3/8 ED VA	L	PN 315	8	G 3/8" -19	22,0	12	40,5	11,5	22	17
VR NW 06 HL 1/2 ED VA	L	PN 315	8	G 1/2" -14	27,0	14	42,5	12,0	27	14
VR NW 08 HL 1/8 ED VA	L	PN 315	10	G 1/8" -28	14,0	8	35,5	10,5	17	19
VR NW 08 HL ED VA	L	PN 315	10	G 1/4" -19	18,7	12	38,0	11,0	19	19
VR NW 08 HL 3/8 ED VA	L	PN 315	10	G 3/8" -19	22,0	12	42,5	12,5	22	19
VR NW 08 HL 1/2 ED VA	L	PN 315	10	G 1/2" -14	26,7	14	46,5	13,0	27	19
VR NW 08 HL 3/4 ED VA	L	PN 315	10	G 3/4" -14	32,0	16	44,0	14,0	32	19
VR NW 10 HL 1/8 ED VA	L	PN 315	12	G 1/8" -28	14,0	8	37,0	11,0	19	22
VR NW 10 HL 1/4 ED VA	L	PN 315	12	G 1/4" -19	18,7	12	42,0	12,5	22	22
VR NW 10 HL ED VA	L	PN 315	12	G 3/8" -19	22,0	12	39,0	12,5	22	22
VR NW 10 HL 1/2 ED VA	L	PN 315	12	G 1/2" -14	26,7	14	45,0	13,0	27	22
VR NW 10 HL 3/4 ED VA	L	PN 160	12	G 3/4" -14	32,0	16	47,0	14,0	32	22
VR NW 13 HL 1/4 ED VA	L	PN 315	15	G 1/4" -19	19,0	12	44,0	13,0	24	27
VR NW 13 HL 3/8 ED VA	L	PN 315	15	G 3/8" -19	22,0	12	43,0	13,6	27	27
VR NW 13 HL ED VA	L	PN 315	15	G 1/2" -14	26,7	14	43,0	14,0	27	27
VR NW 13 HL 3/4 ED VA	L	PN 315	15	G 3/4" -14	32,0	16	48,5	15,0	32	27
VR NW 16 HL 3/8 ED VA	L	PN 315	18	G 3/8" -19	22,0	12	45,0	14,0	27	32
VR NW 16 HL ED VA	L	PN 315	18	G 1/2" -14	26,7	14	45,0	14,5	27	32
VR NW 16 HL 3/4 ED VA	L	PN 315	18	G 3/4" -14	32,0	16	50,0	14,5	32	32
VR NW 16 HL 1 ED VA	L	PN 315	18	G 1" -11	40,0	18	52,0	16,5	41	32
VR NW 20 HL 3/8 ED VA	L	PN 160	22	G 3/8" -19	22,0	12	61,0	16,0	32	36
VR NW 20 HL 1/2 ED VA	L	PN 315	22	G 1/2" -14	27,0	14	51,0	16,5	32	36
VR NW 20 HL ED VA	L	PN 160	22	G 3/4" -14	32,0	16	49,0	16,5	32	36
VR NW 20 HL 1 ED VA	L	PN 160	22	G 1" -11	40,0	18	56,0	17,5	41	36
VR NW 20 HL 1 1/4 ED VA	L	PN 160	22	G 1.1/4" -11	50,0	20	54,0	17,5	50	36
VR NW 25 HL 1/2 ED VA	L	PN 160	28	G 1/2" -14	27,0	14	47,0	17,5	41	41
VR NW 25 HL 3/4 ED VA	L	PN 160	28	G 3/4" -14	32,0	16	54,0	17,5	41	41
VR NW 25 HL ED VA	L	PN 160	28	G 1" -11	39,7	18	52,0	17,5	41	41
VR NW 25 HL 1 1/4 ED VA	L	PN 160	28	G 1.1/4" -11	50,0	20	55,0	18,5	50	41
VR NW 32 HL 1/2 ED VA	L	PN 160	35	G 1/2" -14	27,0	14	51,0	17,5	46	50
VR NW 32 HL 3/4 ED VA	L	PN 160	35	G 3/4" -14	27,0	16	54,0	18,5	46	50
VR NW 32 HL 1 ED VA	L	PN 160	35	G 1" -11	40,0	18	60,0	17,5	46	50
VR NW 32 HL ED VA	L	PN 160	35	G 1.1/4" -11	49,7	20	59,0	17,5	50	50

Titiz kontrole rağmen hatalar önlenemez ve sorumluluk altında bırakmayan bilgiler hakkında hiçbir sorumluluk kabul edilmez.

VR ED VA
Blok Bağlantı

HANSA-FLEX

Ürün

Tanım	Tip	Çalışma basıncı bar	Ø d2 (mm)	G1	Ø d3 (mm)	i (mm)	L1 (mm)	L2 (mm)	SW (mm)	S1
VR NW 32 HL 1 1/2 ED VA	L	PN 160	35	G 1.1/2" -11	55,0	22	66,0	19,5	55	50
VR NW 40 HL 1 ED VA	L	PN 160	42	G 1" -11	40,0	18	65,0	19,0	55	60
VR NW 40 HL ED VA	L	PN 160	42	G 1.1/2" -11	55,0	22	69,0	19,0	55	60
VR NW 40 HL 1 1/4 ED VA	L	PN 160	42	G 1.1/4" -11	50,0	20	67,0	19,0	55	60
VR NW 03 HS 1/8 ED VA	S	PN 630	6	G 1/8" -28	14,0	8	36,0	13,0	14	17
VR NW 03 HS ED VA	S	PN 630	6	G 1/4" -19	18,7	12	40,0	13,0	19	17
VR NW 03 HS 3/8 ED VA	S	PN 630	6	G 3/8" -19	22,0	12	42,0	15,5	22	17
VR NW 03 HS 1/2 ED VA	S	PN 630	6	G 1/2" -14	27,0	14	48,0	18,0	27	17
VR NW 03 HS 3/4 ED VA	S	PN 630	6	G 3/4" -14	31,9	16	45,0	15,0	32	17
VR NW 04 HS 1/8 ED VA	S	PN 630	8	G 1/8" -28	14,0	8	38,0	14,0	17	19
VR NW 04 HS ED VA	S	PN 630	8	G 1/4" -19	18,7	12	42,0	15,0	19	19
VR NW 04 HS 3/8 ED VA	S	PN 630	8	G 3/8" -19	22,0	12	42,5	15,5	22	19
VR NW 04 HS 1/2 ED VA	S	PN 630	8	G 1/2" -14	27,0	14	47,0	15,0	27	19
VR NW 06 HS 1/8 ED VA	S	PN 630	10	G 1/8" -28	14,0	8	38,5	13,5	19	22
VR NW 06 HS 1/4 ED VA	S	PN 630	10	G 1/4" -19	18,7	12	42,5	14,5	22	22
VR NW 06 HS ED VA	S	PN 630	10	G 3/8" -19	22,0	12	43,0	15,0	22	22
VR NW 06 HS 1/2 ED VA	S	PN 630	10	G 1/2" -14	26,7	14	47,0	17,5	27	22
VR NW 06 HS 3/4 ED VA	S	PN 630	10	G 3/4" -14	31,9	16	47,0	14,5	32	22
VR NW 08 HS 1/4 ED VA	S	PN 630	12	G 1/4" -19	19,0	12	45,0	16,5	22	24
VR NW 08 HS ED VA	S	PN 630	12	G 3/8" -19	22,0	12	45,0	17,0	22	24
VR NW 08 HS 1/2 ED VA	S	PN 630	12	G 1/2" -14	27,0	14	47,5	17,5	27	24
VR NW 08 HS 3/4 ED VA	S	PN 630	12	G 3/4" -14	32,0	16	52,0	17,5	32	24
VR NW 10 HS 1/4 ED VA	S	PN 630	14	G 1/4" -19	19,0	12	46,0	16,0	24	27
VR NW 10 HS 3/8 ED VA	S	PN 630	14	G 3/8" -19	22,0	12	48,0	18,5	24	27
VR NW 10 HS ED VA	S	PN 630	14	G 1/2" -14	26,7	14	51,0	19,0	27	27
VR NW 10 HS 3/4 ED VA	S	PN 630	14	G 3/4" -14	32,0	16	55,0	21,0	32	27
VR NW 10 HS 1 ED VA	S	PN 630	14	G 1" -11	40,0	18	59,0	23,0	41	24
VR NW 13 HS 1/4 ED VA	S	PN 400	16	G 1/4" -19	19,0	12	50,0	17,5	27	30
VR NW 13 HS 3/8 ED VA	S	PN 400	16	G 3/8" -19	22,0	12	47,0	18,0	27	30
VR NW 13 HS ED VA	S	PN 400	16	G 1/2" -14	26,7	14	51,0	18,5	27	30
VR NW 13 HS 3/4 ED VA	S	PN 400	16	G 3/4" -14	32,0	16	55,0	20,5	32	30
VR NW 13 HS 1 ED VA	S	PN 400	16	G 1" -11	40,0	18	59,0	22,5	41	30
VR NW 16 HS 3/8 ED VA	S	PN 400	20	G 3/8" -19	22,0	12	-	18,0	32	36
VR NW 16 HS 1/2 ED VA	S	PN 400	20	G 1/2" -14	27,0	14	56,0	20,5	32	36
VR NW 16 HS ED VA	S	PN 400	20	G 3/4" -14	32,0	16	58,0	20,5	32	36
VR NW 16 HS 1 ED VA	S	PN 400	20	G 1" -11	39,7	18	62,0	20,5	41	36
VR NW 16 HS 11/4 ED VA	S	PN 400	20	G 1.1/4" -11	50,0	20	64,0	22,5	50	36
VR NW 16 HS 11/2 ED VA	S	PN 400	20	G 1.1/2" -11	55,0	22	69,0	25,5	55	36
VR NW 20 HS 1/2 ED VA	S	PN 400	25	G 1/2" -14	27,0	14	61,0	23,0	41	46
VR NW 20 HS 3/4 ED VA	S	PN 400	25	G 3/4" -14	32,0	16	63,0	23,0	41	46
VR NW 20 HS ED VA	S	PN 400	25	G 1" -11	39,7	18	65,0	23,0	41	46
VR NW 20 HS 1 1/4 ED VA	S	PN 400	25	G 1.1/4" -11	50,0	18	65,0	23,0	50	46
VR NW 20 HS 11/2 ED VA	S	PN 400	25	G 1.1/2" -11	55,0	22	72,0	26,0	55	46
VR NW 25 HS 3/4 ED VA	S	PN 400	30	G 3/4" -14	32,0	16	-	25,5	46	50
VR NW 25 HS 1 ED VA	S	PN 400	30	G 1" -11	40,0	18	68,0	23,5	46	50
VR NW 25 HS ED VA	S	PN 400	30	G 1.1/4" -11	49,7	20	70,0	23,5	50	50
VR NW 25 HS 1 1/2 ED VA	S	PN 400	30	G 1.1/2" -11	55,0	22	75,0	23,5	55	50
VR NW 32 HS 1 ED VA	S	PN 315	38	G 1" -11	40,0	18	60,0	26,0	46	50
VR NW 32 HS 1 1/4 ED VA	S	PN 315	38	G 1.1/4" -11	50,0	20	74,0	26,0	55	60
VR NW 32 HS ED VA	S	PN 315	38	G 1.1/2" -11	55,0	22	79,0	26,0	55	60

Model: LL = Çok hafif L = Hafif S = Ağır – PN=Çalışma Basınçı PB=Patlama Basınçı – çap d2 = Boru dış çapı

Ürün türleri

VR ED	Blok Bağlantı, Çelik
VR ED MG	Blok Bağlantı, Pirinç
XVR ED VA	Blok Bağlantı, Paslanmaz çelik

Yedek Parçalar

WD V	Yumuşak Conta

Titiz kontrole rağmen hatalar önlenemez ve sorumluluk altında bırakmayan bilgiler hakkında hiçbir sorumluluk kabul edilmez.