LOET DKF
Lehim Ağızları DKF

Özellikler

Model	Lehim ağızları
Dizayn	düz
Malzeme	Çelik
Yüzey koruması	yağlı



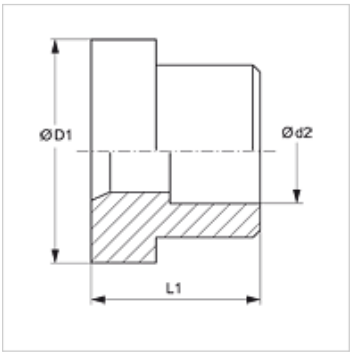

Ürün

Tanım	Ø d2 (mm)	Ø D1 (mm)	L1 (mm)
LOET 06 DKF 06	6	13,0	10,0
LOET 10 DKF 08	8	16,0	10,0
LOET 10 DKF 10	10	16,0	10,0
LOET 13 DKF 12	12	19,0	10,0
LOET 16 DKF 14	14	23,0	11,0
LOET 16 DKF 15	15	23,0	11,0
LOET 16 DKF 16	16	23,0	11,0
LOET 20 DKF 18	18	28,0	14,0
LOET 20 DKF 20	20	28,0	14,0
LOET 20 DKF 22	22	28,0	14,0
LOET 25 DKF 25	25	34,0	16,0
LOET 32 DKF 30	30	41,0	16,0
LOET 32 DKF 32	32	41,0	16,0
LOET 40 DKF 35	35	49,0	16,0
LOET 40 DKF 38	38	49,0	16,0

çap d2 = Boru dış çapı

Titiz kontrole rağmen hatalar önlenemez ve sorumluluk altında bırakmayan bilgiler hakkında hiçbir sorumluluk kabul edilmez.