XV VA
Bağlantı

HANSA FLEX

Özellikler

Bağlantı 1	metrik dış diş, silindirik
Sızdırmazlık şekli 1	24° içe havşalı
Bağlantı 2	metrik dış diş, silindirik
Sızdırmazlık şekli 2	24° içe havşalı
Model	Bağlantı
Dizayn	düz
Standart	ISO 8434-1
Teslimat kapsamı	Gövde (somun ve yüzüksüz)
Malzeme	Paslanmaz çelik

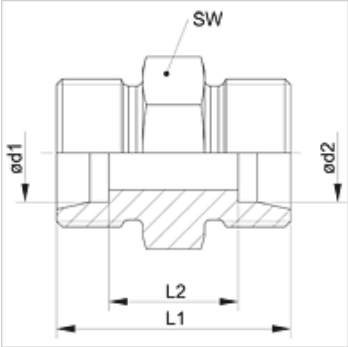

Açıklama

Montaj, Basınç Değeri ve izin verilen Çalışma Sıcaklıkları ile ilgili Bilgiler için Lütfen Boru Bağlantı Teknik Bilgilerine Bakınız.

Ürün

Tanım	Tip	Çalışma basıncı bar	Ø d1 (mm)	Ø d2 (mm)	L1 (mm)	L2 (mm)	SW (mm)
XV 04 LL VA	LL	PN 100	4	4	20,0	12,0	9
XV 06 LL 04 VA	LL	PN 100	6	4	20,0	10,5	11
XV 06 LL VA	LL	PN 100	6	6	20,0	9,0	11
XV 08 LL 04 VA	LL	PN 100	8	4	22,0	12,5	12
XV 08 LL 06 VA	LL	PN 100	8	6	22,0	11,0	12
XV 08 LL VA	LL	PN 100	8	8	23,0	12,0	12
XV NW 04 HL VA	L	PN 315	6	6	24,0	10,0	12
XV NW 06 HL 04 VA	L	PN 315	8	6	25,0	11,0	14
XV NW 06 HL VA	L	PN 315	8	8	25,0	11,0	14
XV NW 08 HL 04 VA	L	PN 315	10	6	26,0	12,0	17
XV NW 08 HL 06 VA	L	PN 315	10	8	26,0	12,0	17
XV NW 08 HL VA	L	PN 315	10	10	27,0	13,0	17
XV NW 10 HL 04 VA	L	PN 315	12	6	27,0	13,0	19
XV NW 10 HL 06 VA	L	PN 315	12	8	27,0	13,0	19
XV NW 10 HL 08 VA	L	PN 315	12	10	28,0	14,0	19
XV NW 10 HL VA	L	PN 315	12	12	28,0	14,0	19
XV NW 13 HL 04 VA	L	PN 315	15	6	28,0	14,0	24
XV NW 13 HL 06 VA	L	PN 315	15	8	28,0	14,0	24
XV NW 13 HL 08 VA	L	PN 315	15	10	29,0	15,0	24
XV NW 13 HL 10 VA	L	PN 315	15	12	29,0	15,0	24
XV NW 13 HL VA	L	PN 315	15	15	30,0	16,0	24
XV NW 16 HL 06 VA	L	PN 315	18	8	29,0	14,5	27
XV NW 16 HL 08 VA	L	PN 315	18	10	30,0	15,5	27
XV NW 16 HL 10 VA	L	PN 315	18	12	30,0	15,5	27
XV NW 16 HL 13 VA	L	PN 315	18	15	31,0	16,5	27
XV NW 16 HL VA	L	PN 315	18	18	31,0	16,0	27
XV NW 20 HL 08 VA	L	PN 160	22	10	32,0	17,5	32
XV NW 20 HL 10 VA	L	PN 160	22	12	32,0	17,5	32
XV NW 20 HL 13 VA	L	PN 160	22	15	33,0	18,5	32
XV NW 20 HL 16 VA	L	PN 160	22	18	33,0	18,0	32
XV NW 20 HL VA	L	PN 160	22	22	35,0	20,0	32
XV NW 25 HL 08 VA	L	PN 160	28	10	34,0	19,5	41
XV NW 25 HL 10 VA	L	PN 160	28	12	34,0	19,5	41
XV NW 25 HL 13 VA	L	PN 160	28	15	35,0	20,5	41
XV NW 25 HL 16 VA	L	PN 160	28	18	35,0	20,0	41
XV NW 25 HL 20 VA	L	PN 160	28	22	37,0	22,0	41
XV NW 25 HL VA	L	PN 160	28	28	36,0	21,0	41
XV NW 32 HL 13 VA	L	PN 160	35	15	37,0	19,5	46
XV NW 32 HL 16 VA	L	PN 160	35	18	37,0	19,0	46
XV NW 32 HL 20 VA	L	PN 160	35	22	39,0	21,0	46
XV NW 32 HL 25 VA	L	PN 160	35	28	39,0	21,0	46
XV NW 32 HL VA	L	PN 160	35	35	41,0	20,0	46
XV NW 40 HL 13 VA	L	PN 160	42	15	39,0	21,0	55
XV NW 40 HL 16 VA	L	PN 160	42	18	39,0	21,5	55

Titiz kontrole rağmen hatalar önlenemez ve sorumluluk altında bırakmayan bilgiler hakkında hiçbir sorumluluk kabul edilmez.

Ürün

Tanım	Tip	Çalışma basıncı bar	Ø d1 (mm)	Ø d2 (mm)	L1 (mm)	L2 (mm)	SW (mm)
XV NW 40 HL 20 VA	L	PN 160	42	22	39,5	21,0	55
XV NW 40 HL 25 VA	L	PN 160	42	28	41,0	22,5	55
XV NW 40 HL 32 VA	L	PN 160	42	35	43,0	21,5	55
XV NW 40 HL VA	L	PN 160	42	42	66,0	21,0	55
XV NW 03 HS VA	S	PN 630	6	6	30,0	16,0	14
XV NW 04 HS 03 VA	S	PN 630	8	6	32,0	18,0	17
XV NW 04 HS VA	S	PN 630	8	8	32,0	18,0	17
XV NW 06 HS 03 VA	S	PN 630	10	6	32,0	17,5	19
XV NW 06 HS 04 VA	S	PN 630	10	8	32,0	17,5	19
XV NW 06 HS VA	S	PN 630	10	10	32,0	17,0	19
XV NW 08 HS 03 VA	S	PN 630	12	6	34,0	19,5	22
XV NW 08 HS 04 VA	S	PN 630	12	8	34,0	19,5	22
XV NW 08 HS 06 VA	S	PN 630	12	10	34,0	19,0	22
XV NW 08 HS VA	S	PN 630	12	12	34,0	19,0	22
XV NW 10 HS 03 VA	S	PN 630	14	6	36,0	21,0	24
XV NW 10 HS 04 VA	S	PN 630	14	8	36,0	21,0	24
XV NW 10 HS 06 VA	S	PN 630	14	10	36,0	20,5	24
XV NW 10 HS 08 VA	S	PN 630	14	12	36,0	20,5	24
XV NW 10 HS VA	S	PN 630	14	14	38,0	22,0	24
XV NW 13 HS 03 VA	S	PN 400	16	6	36,0	20,5	27
XV NW 13 HS 04 VA	S	PN 400	16	8	36,0	20,5	27
XV NW 13 HS 06 VA	S	PN 400	16	10	36,0	20,0	27
XV NW 13 HS 08 VA	S	PN 400	16	12	36,0	20,0	27
XV NW 13 HS 10 VA	S	PN 400	16	14	38,0	21,5	27
XV NW 13 HS VA	S	PN 400	16	16	38,0	21,0	27
XV NW 16 HS 03 VA	S	PN 400	20	6	40,0	22,5	32
XV NW 16 HS 04 VA	S	PN 400	20	8	40,0	22,5	32
XV NW 16 HS 06 VA	S	PN 400	20	10	40,0	22,0	32
XV NW 16 HS 08 VA	S	PN 400	20	12	40,0	22,0	32
XV NW 16 HS 10 VA	S	PN 400	20	14	42,0	23,5	32
XV NW 16 HS 13 VA	S	PN 400	20	16	42,0	23,0	32
XV NW 16 HS VA	S	PN 400	20	20	44,0	23,0	32
XV NW 20 HS 04 VA	S	PN 400	25	8	44,0	25,0	41
XV NW 20 HS 06 VA	S	PN 400	25	10	44,0	24,5	41
XV NW 20 HS 08 VA	S	PN 400	25	12	44,0	24,5	41
XV NW 20 HS 10 VA	S	PN 400	25	14	46,0	26,0	41
XV NW 20 HS 13 VA	S	PN 400	25	16	46,0	25,5	41
XV NW 20 HS 16 VA	S	PN 400	25	20	48,0	25,5	41
XV NW 20 HS VA	S	PN 400	25	25	50,0	26,0	41
XV NW 25 HS 06 VA	S	PN 400	30	10	46,5	25,5	46
XV NW 25 HS 08 VA	S	PN 400	30	12	46,0	25,0	46
XV NW 25 HS 10 VA	S	PN 400	30	14	48,0	26,5	46
XV NW 25 HS 13 VA	S	PN 400	30	16	48,0	26,0	46
XV NW 25 HS 16 VA	S	PN 400	30	20	50,0	26,0	46
XV NW 25 HS 20 VA	S	PN 400	30	25	52,0	26,5	46
XV NW 25 HS VA	S	PN 400	30	30	54,0	27,0	46
XV NW 32 HS 06 VA	S	PN 315	38	10	51,5	28,0	55
XV NW 32 HS 08 VA	S	PN 315	38	12	51,0	27,5	55
XV NW 32 HS 10 VA	S	PN 315	38	14	53,0	29,0	55
XV NW 32 HS 13 VA	S	PN 315	38	16	53,0	28,5	55
XV NW 32 HS 16 VA	S	PN 315	38	20	55,0	28,5	55
XV NW 32 HS 20 VA	S	PN 315	38	25	57,0	29,0	55
XV NW 32 HS 25 VA	S	PN 315	38	30	59,0	29,5	55
XV NW 32 HS VA	S	PN 315	38	38	61,0	29,0	55

Model: LL = Çok hafif L = Hafif S = Ağır – PN=Çalışma Basınçı PB=Patlama Basınçı – çap d1 = Boru dış çapı – çap d2 = Boru dış çapı

Ürün türleri

XV	Bağlantı, Çelik
V-LL VA / V-HL VA / V-HS VA	Bağlantı, Paslanmaz çelik