XVR VA
Blok Bağlantı

Özellikler

Bağlantı 1	BSP dış diş silindirik
Sızdırmazlık şekli 1	Form B
Bağlantı 2	metrik dış diş, silindirik
Sızdırmazlık şekli 2	24° içe havşalı
Model	Blok Bağlantı
Dizayn	düz
Standart	DIN 3901
Teslimat kapsamı	Gövde (somun ve yüzüksüz)
Malzeme	Paslanmaz çelik



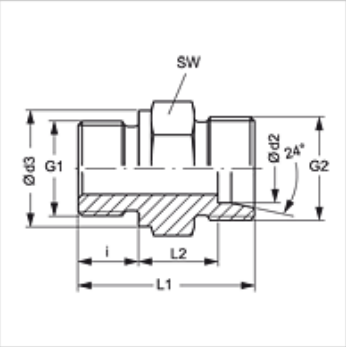

Açıklama

Montaj, Basınç Değeri ve izin verilen Çalışma Sıcaklıkları ile ilgili Bilgiler için Lütfen Boru Bağlantı Teknik Bilgilerine Bakınız.

Ürün

Tanım	Tip	Çalışma basıncı bar	Ø d2 (mm)	G1	G2	Ø d3 (mm)	i (mm)	L1 (mm)	L2 (mm)	SW (mm)
XVR NW 04 HL VA	L	PN 315	6	G 1/8" -28	M 12 x 1,5	14	8	23,5	8,5	14
XVR NW 04 HL 1/4 VA	L	PN 315	6	G 1/4" -19	M 12 x 1,5	18	12	29,0	10,0	19
XVR NW 04 HL 3/8 VA	L	PN 315	6	G 3/8" -19	M 12 x 1,5	22	12	30,5	11,5	22
XVR NW 04 HL 1/2 VA	L	PN 315	6	G 1/2" -14	M 12 x 1,5	26	14	32,0	12,0	27
XVR NW 06 HL 1/8 VA	L	PN 315	8	G 1/8" -28	M 14 x 1,5	14	8	24,0	9,0	14
XVR NW 06 HL VA	L	PN 315	8	G 1/4" -19	M 14 x 1,5	18	12	29,0	10,0	19
XVR NW 06 HL 3/8 VA	L	PN 315	8	G 3/8" -19	M 14 x 1,5	22	12	30,5	11,5	22
XVR NW 06 HL 1/2 VA	L	PN 315	8	G 1/2" -14	M 14 x 1,5	26	14	33,0	12,0	27
XVR NW 08 HL 1/8 VA	L	PN 315	10	G 1/8" -28	M 16 x 1,5	14	8	25,5	10,5	17
XVR NW 08 HL VA	L	PN 315	10	G 1/4" -19	M 16 x 1,5	18	12	30,0	11,0	19
XVR NW 08 HL 3/8 VA	L	PN 315	10	G 3/8" -19	M 16 x 1,5	22	12	31,5	12,5	22
XVR NW 08 HL 1/2 VA	L	PN 315	10	G 1/2" -14	M 16 x 1,5	26	14	34,0	13,0	27
XVR NW 08 HL 3/4 VA	L	PN 315	10	G 3/4" -14	M 16 x 1,5	32	16	37,0	14,0	32
XVR NW 10 HL 1/8 VA	L	PN 315	12	G 1/8" -28	M 18 x 1,5	14	8	26,5	11,5	19
XVR NW 10 HL 1/4 VA	L	PN 315	12	G 1/4" -19	M 18 x 1,5	18	12	31,0	12,0	19
XVR NW 10 HL VA	L	PN 315	12	G 3/8" -19	M 18 x 1,5	22	12	31,5	12,5	22
XVR NW 10 HL 1/2 VA	L	PN 315	12	G 1/2" -14	M 18 x 1,5	26	14	34,0	13,0	27
XVR NW 10 HL 3/4 VA	L	PN 315	12	G 3/4" -14	M 18 x 1,5	32	16	37,0	14,0	32
XVR NW 13 HL 1/4 VA	L	PN 315	15	G 1/4" -19	M 22 x 1,5	18	12	32,0	13,0	24
XVR NW 13 HL 3/8 VA	L	PN 250	15	G 3/8" -19	M 22 x 1,5	22	12	33,0	14,0	24
XVR NW 13 HL VA	L	PN 250	15	G 1/2" -14	M 22 x 1,5	26	14	35,0	14,0	27
XVR NW 13 HL 3/4 VA	L	PN 250	15	G 3/4" -14	M 22 x 1,5	32	16	38,0	15,0	32
XVR NW 16 HL 3/8 VA	L	PN 250	18	G 3/8" -19	M 26 x 1,5	22	12	33,5	14,0	27
XVR NW 16 HL VA	L	PN 250	18	G 1/2" -14	M 26 x 1,5	26	14	36,0	14,5	27
XVR NW 16 HL 3/4 VA	L	PN 250	18	G 3/4" -14	M 26 x 1,5	32	16	38,0	14,5	32
XVR NW 16 HL 1 VA	L	PN 250	18	G 1" -11	M 26 x 1,5	39	18	40,5	15,0	41
XVR NW 20 HL 3/8 VA	L	PN 160	22	G 3/8" -19	M 30 x 2	22	12	36,0	16,5	32
XVR NW 20 HL 1/2 VA	L	PN 160	22	G 1/2" -14	M 30 x 2	26	14	38,0	16,5	32
XVR NW 20 HL VA	L	PN 160	22	G 3/4" -14	M 30 x 2	32	16	40,0	16,5	32
XVR NW 20 HL 1 VA	L	PN 160	22	G 1" -11	M 30 x 2	39	18	43,0	17,5	41
XVR NW 20 HL 1 1/4 VA	L	PN 160	22	G 1.1/4" -11	M 30 x 2	49	20	46,0	18,5	50
XVR NW 25 HL 1/2 VA	L	PN 160	28	G 1/2" -14	M 36 x 2	26	14	40,0	18,5	41
XVR NW 25 HL 3/4 VA	L	PN 160	28	G 3/4" -14	M 36 x 2	32	16	41,0	17,5	41
XVR NW 25 HL VA	L	PN 160	28	G 1" -11	M 36 x 2	39	18	43,0	17,5	41
XVR NW 25 HL 11/4 VA	L	PN 160	28	G 1.1/4" -11	M 36 x 2	49	20	46,0	18,5	50
XVR NW 32 HL 1/2 VA	L	PN 160	35	G 1/2" -14	M 45 x 2	26	14	42,0	17,5	46
XVR NW 32 HL 3/4 VA	L	PN 160	35	G 3/4" -14	M 45 x 2	32	16	45,0	18,5	46
XVR NW 32 HL 1 VA	L	PN 160	35	G 1" -11	M 45 x 2	39	18	47,0	18,5	50
XVR NW 32 HL VA	L	PN 160	35	G 1.1/4" -11	M 45 x 2	49	20	48,0	17,5	50
XVR NW 32 HL 11/2 VA	L	PN 160	35	G 1.1/2" -11	M 45 x 2	55	22	51,0	18,5	55
XVR NW 40 HL 1 VA	L	PN 160	42	G 1" -11	M 52 x 2	39	18	48,0	19,0	55
XVR NW 40 HL 11/4 VA	L	PN 160	42	G 1.1/4" -11	M 52 x 2	49	20	50,0	19,0	55
XVR NW 40 HL VA	L	PN 160	42	G 1.1/2" -11	M 52 x 2	55	22	52,0	19,0	55
XVR NW 03 HS 1/8 VA	S	PN 400	6	G 1/8" -28	M 14 x 1,5	14	8	27,5	12,5	17

Titiz kontrole rağmen hatalar önlenemez ve sorumluluk altında bırakmayan bilgiler hakkında hiçbir sorumluluk kabul edilmez.

Ürün

Tanım	Tip	Çalışma basıncı bar	Ø d2 (mm)	G1	G2	Ø d3 (mm)	i (mm)	L1 (mm)	L2 (mm)	SW (mm)
XVR NW 03 HS VA	S	PN 400	6	G 1/4" -19	M 14 x 1,5	18	12	32,0	13,0	19
XVR NW 03 HS 3/8 VA	S	PN 400	6	G 3/8" -19	M 14 x 1,5	22	12	32,5	13,5	22
XVR NW 03 HS 1/2 VA	S	PN 400	6	G 1/2" -14	M 14 x 1,5	26	14	35,0	14,0	27
XVR NW 03 HS 3/4 VA	S	PN 400	6	G 3/4" -14	M 14 x 1,5	32	16	38,0	15,0	32
XVR NW 04 HS 1/8 VA	S	PN 400	8	G 1/8" -28	M 16 x 1,5	14	8	27,0	12,0	17
XVR NW 04 HS VA	S	PN 400	8	G 1/4" -19	M 16 x 1,5	18	12	34,0	15,0	19
XVR NW 04 HS 3/8 VA	S	PN 400	8	G 3/8" -19	M 16 x 1,5	22	12	34,5	15,5	22
XVR NW 04 HS 1/2 VA	S	PN 400	8	G 1/2" -14	M 16 x 1,5	26	14	37,0	16,0	27
XVR NW 06 HS 1/8 VA	S	PN 400	10	G 1/8" -28	M 18 x 1,5	14	8	29,5	14,0	19
XVR NW 06 HS 1/4 VA	S	PN 400	10	G 1/4" -19	M 18 x 1,5	18	12	34,0	14,5	22
XVR NW 06 HS VA	S	PN 400	10	G 3/8" -19	M 18 x 1,5	22	12	34,5	15,0	22
XVR NW 06 HS 1/2 VA	S	PN 400	10	G 1/2" -14	M 18 x 1,5	26	14	39,0	17,5	27
XVR NW 06 HS 3/4 VA	S	PN 400	10	G 3/4" -14	M 18 x 1,5	32	16	38,0	14,5	32
XVR NW 08 HS 1/4 VA	S	PN 400	12	G 1/4" -19	M 20 x 1,5	18	12	36,0	16,5	22
XVR NW 08 HS VA	S	PN 400	12	G 3/8" -19	M 20 x 1,5	22	12	36,5	17,5	22
XVR NW 08 HS 1/2 VA	S	PN 400	12	G 1/2" -14	M 20 x 1,5	26	14	39,0	17,5	27
XVR NW 08 HS 3/4 VA	S	PN 400	12	G 3/4" -14	M 20 x 1,5	32	16	41,0	17,5	32
XVR NW 10 HS 1/4 VA	S	PN 400	14	G 1/4" -19	M 22 x 1,5	18	12	38,5	18,5	24
XVR NW 10 HS 3/8 VA	S	PN 400	14	G 3/8" -19	M 22 x 1,5	22	12	38,5	18,5	24
XVR NW 10 HS VA	S	PN 400	14	G 1/2" -14	M 22 x 1,5	26	14	41,0	19,0	27
XVR NW 10 HS 3/4 VA	S	PN 400	14	G 3/4" -14	M 22 x 1,5	32	16	43,0	19,0	32
XVR NW 10 HS 1 VA	S	PN 250	14	G 1" -11	M 22 x 1,5	39	18	48,0	22,0	41
XVR NW 13 HS 1/4 VA	S	PN 400	16	G 1/4" -19	M 24 x 1,5	18	12	38,0	17,5	27
XVR NW 13 HS 3/8 VA	S	PN 400	16	G 3/8" -19	M 24 x 1,5	22	12	39,0	18,5	27
XVR NW 13 HS VA	S	PN 400	16	G 1/2" -14	M 24 x 1,5	26	14	41,0	18,5	27
XVR NW 13 HS 3/4 VA	S	PN 400	16	G 3/4" -14	M 24 x 1,5	32	16	45,0	20,5	32
XVR NW 13 HS 1 VA	S	PN 400	16	G 1" -11	M 24 x 1,5	39	18	43,5	21,5	41
XVR NW 16 HS 3/8 VA	S	PN 400	20	G 3/8" -19	M 30 x 2	22	12	45,0	22,5	32
XVR NW 16 HS 1/2 VA	S	PN 400	20	G 1/2" -14	M 30 x 2	26	14	45,0	20,5	32
XVR NW 16 HS VA	S	PN 400	20	G 3/4" -14	M 30 x 2	32	16	47,0	20,5	32
XVR NW 16 HS 1 VA	S	PN 250	20	G 1" -11	M 30 x 2	39	18	50,0	21,5	41
XVR NW 16 HS 1 1/4 VA	S	PN 400	20	G 1.1/4" -11	M 30 x 2	49	20	53,0	22,5	50
XVR NW 16 HS 1 1/2 VA	S	PN 400	20	G 1.1/2" -11	M 30 x 2	55	22	58,0	25,5	55
XVR NW 20 HS 1/2 VA	S	PN 250	25	G 1/2" -14	M 36 x 2	26	14	49,0	23,0	41
XVR NW 20 HS 3/4 VA	S	PN 250	25	G 3/4" -14	M 36 x 2	32	16	51,0	23,0	41
XVR NW 20 HS VA	S	PN 250	25	G 1" -11	M 36 x 2	39	18	53,0	23,0	41
XVR NW 20 HS 1 1/4 VA	S	PN 160	25	G 1.1/4" -11	M 36 x 2	49	20	56,0	24,0	50
XVR NW 20 HS 1 1/2 VA	S	PN 400	25	G 1.1/2" -11	M 36 x 2	55	22	60,0	26,0	55
XVR NW 25 HS 3/4 VA	S	PN 160	30	G 3/4" -14	M 42 x 2	32	16	53,0	23,5	46
XVR NW 25 HS 1 VA	S	PN 160	30	G 1" -11	M 42 x 2	39	18	55,0	23,5	46
XVR NW 25 HS VA	S	PN 160	30	G 1.1/4" -11	M 42 x 2	49	20	57,0	23,5	50
XVR NW 25 HS 1 1/2 VA	S	PN 160	30	G 1.1/2" -11	M 42 x 2	55	22	62,0	26,5	55
XVR NW 32 HS 1 VA	S	PN 160	38	G 1" -11	M 52 x 2	39	18	60,0	26,0	55
XVR NW 32 HS 1 1/4 VA	S	PN 160	38	G 1.1/4" -11	M 52 x 2	49	20	62,0	26,0	55
XVR NW 32 HS VA	S	PN 160	38	G 1.1/2" -11	M 52 x 2	55	22	64,0	26,0	55

Model: LL = Çok hafif L = Hafif S = Ağır – PN=Çalışma Basınçı PB=Patlama Basınçı – çap d2 = Boru dış çapı

Ürün türleri

XVR	Blok Bağlantı, Çelik
VR VA	Blok Bağlantı, Paslanmaz çelik

Titiz kontrole rağmen hatalar önlenemez ve sorumluluk altında bırakmayan bilgiler hakkında hiçbir sorumluluk kabul edilmez.