PW G
Sıyırıcı, PW-G

Özellikler

Kayma hızı max.	0,8 m/s
Sıcaklık min.	-30 °C
Sıcaklık max.	80 °C
Akışkanlar	Mineral yağlar
Montaj	açık bir somuna preslenir
Malzeme	(1) Kovan: Çelik (2) Sıyırıcı: PUR
Uygulama	Hidrolik

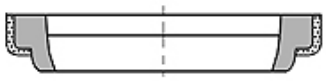

Toleranz / Tolerance		
d	D	L
h11	H8	+0,20 0

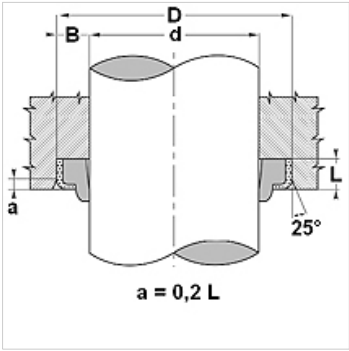

Açıklama

Az yer ihtiyacı
aşınmaya karşı çok yüksek dayanıklılık
Basit çözüm.

Ürün

Tanım	d (mm)	TR (mm)	L (mm)
PW 8-1G	8	14	3,5
PW 10-2G	10	16	3,5
PW 10-1G	10	20	5,0
PW 12-3G	12	18	3,5
PW 12-2G	12	20	4,0
PW 12-1G	12	22	5,0
PW 14-2G	14	20	3,5
PW 14-G	14	22	4,5
PW 15-2G	15	21	3,5
PW 16-2G	16	22	3,0
PW 16-1G	16	26	5,0
PW 18-G	18	26	4,5
PW 18-2G	18	28	5,0
PW 20-2G	20	30	4,0
PW 20-3G	20	30	5,0
PW 20-1G	20	30	7,0
PW 22-2G	22	28	5,0
PW 22-3G	22	32	5,0
PW 22-1G	22	32	7,0
PW 25-2G	25	32	5,0
PW 25-3G	25	35	5,0
PW 28-3G	28	38	5,0
PW 28-2G	28	38	7,0
PW 28-1G	28	40	7,0
PW 30-3G	30	40	5,0
PW 30-1G	30	40	7,0
PW 30-2G	30	45	5,0
PW 32-4G	32	42	5,0
PW 32-3G	32	42	7,0
PW 32-2G	32	45	4,0
PW 33-1G	33	43	7,0
PW 35-1G	35	45	7,0
PW 36-1G	36	45	7,0
PW 38-1G	38	48	7,0
PW 40-2G	40	50	5,0
PW 42-2G	42	52	5,0
PW 42-1G	42	52	7,0
PW 45-3G	45	55	5,0
PW 45-2G	45	55	7,0
PW 45-G	45	57	7,0
PW 45-1G	45	60	7,0
PW 50-2G	50	60	5,0
PW 50-1G	50	60	7,0
PW 55-2G	55	65	5,0

Titiz kontrole rağmen hatalar önlenemez ve sorumluluk altında bırakmayan bilgiler hakkında hiçbir sorumluluk kabul edilmez.

Ürün

Tanım	d (mm)	TR (mm)	L (mm)
PW 55-1G	55	65	7,0
PW 56-2G	56	66	5,0
PW 56-1G	56	66	7,0
PW 60-4G	60	70	5,0
PW 60-1G	60	70	7,0
PW 60-3G	60	74	5,0
PW 63-2G	63	73	5,0
PW 63-1G	63	75	7,0
PW 65-2G	65	75	5,0
PW 65-1G	65	75	7,0
PW 70-2G	70	80	5,0
PW 70-1G	70	80	7,0
PW 75-2G	75	83	7,0
PW 75-1G	75	85	7,0
PW 80-2G	80	88	7,0
PW 80-1G	80	90	7,0
PW 90-1G	90	100	7,0
PW 95-1G	95	105	7,0
PW 100-1G	100	110	7,0
PW 100-G	100	114	8,0
PW 105-1G	105	115	7,0
PW 110-1G	110	120	7,0
PW 120-1G	120	130	7,0

Titiz kontrole rağmen hatalar önlenemez ve sorumluluk altında bırakmayan bilgiler hakkında hiçbir sorumluluk kabul edilmez.