# GAR ABS
Sıyırıcı, GA-R

HANSA-FLEX

## Özellikler

| | |
|---|---|
| **Model** | Sıyırıcı |
| **Kayma hızı max.** | 0,5 m/s |
| **Sıcaklık min.** | -30 °C |
| **Sıcaklık max.** | 100 °C |
| **Akışkanlar** | Mineral yağlar<br>Su emülsiyonları |
| **Montaj** | açık bir somuna preslenir |
| **Malzeme** | (1) Kovan: Çelik<br>(2) Sıyırıcı: 90° Shore A NBR |
| **Uygulama** | Hidrolik |

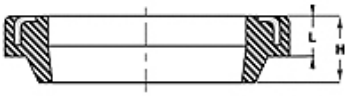


| Toleranz / Tolerance | | |
|---|---|---|
| d | D | L |
| h11 | H8 | +0,20<br>0 |

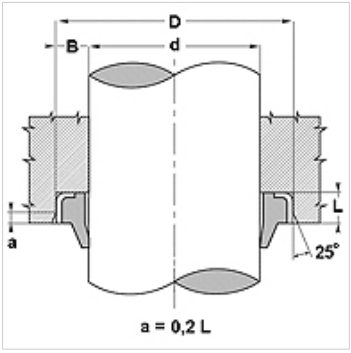


## Açıklama

Az yer ihtiyacı
dıştaki metal halka üzerinden içeriye kir giremez.
Basit çözüm.

## Siparişle ilgili bilgiler

Özel işletme koşullarında (sıvı, sıcaklık, basınç ...) lütfen bizimle irtibata geçin.
Farklı madde mümkündür: FPM.

## Ürün

| Tanım | d (mm) | TR (mm) | L (mm) | H (mm) |
|---|---|---|---|---|
| **GA 12 18-3-R** | 12 | 18,0 | 3,5 | 5,0 |
| **GA 14 20-3-R** | 14 | 20,0 | 3,5 | 5,0 |
| **GA 15 21-3-R** | 15 | 21,0 | 3,5 | 5,0 |
| **GA 16 22-3-R** | 16 | 22,0 | 3,5 | 5,0 |
| **GA 18 28-5-R** | 18 | 28,0 | 5,0 | 7,0 |
| **GA 20 30-5-R** | 20 | 30,0 | 5,0 | 7,0 |
| **GA 22 32-5-R** | 22 | 32,0 | 5,0 | 7,0 |
| **GA 25 35-5-R** | 25 | 35,0 | 5,0 | 7,0 |
| **GA 28 38-5-R** | 28 | 38,0 | 5,0 | 7,0 |
| **GA 30 40-5-R** | 30 | 40,0 | 5,0 | 7,0 |
| **GA 30 40-7-R** | 30 | 40,0 | 7,0 | 10,0 |
| **GA 32 42-5-R** | 32 | 42,0 | 5,0 | 7,0 |
| **GA 36 46-5-R** | 36 | 46,0 | 5,0 | 7,0 |
| **GA 40 50-5-R** | 40 | 50,0 | 5,0 | 8,0 |
| **GA 42 52-5-R** | 42 | 52,0 | 5,0 | 7,0 |
| **GA 45 55-5-R** | 45 | 55,0 | 5,0 | 7,0 |
| **GA 50 60-5-R** | 50 | 60,0 | 5,0 | 7,0 |
| **GA 55 65-5-R** | 55 | 65,0 | 5,0 | 7,0 |
| **GA 56 66-5-R** | 56 | 66,0 | 5,0 | 7,0 |
| **GA 60 70-5-R** | 60 | 70,0 | 5,0 | 7,0 |
| **GA 63 73-5-R** | 63 | 73,0 | 5,0 | 7,0 |
| **GA 65 75-5-R** | 65 | 75,0 | 5,0 | 7,0 |
| **GA 70 80-5-R** | 70 | 80,0 | 5,0 | 7,0 |
| **GA 75 83-7-R** | 75 | 83,0 | 7,0 | 10,0 |
| **GA 80 88-7-R** | 80 | 88,0 | 7,0 | 10,0 |
| **GA 80 90-7-R** | 80 | 90,0 | 7,0 | 10,0 |

*Titiz kontrole rağmen hatalar önlenemez ve sorumluluk altında bırakmayan bilgiler hakkında hiçbir sorumluluk kabul edilmez.*