PR V1 (M)
Çelik Çekme Boru, Metrik, 1.4301

HANSA-FLEX

Özellikler

Model	Çelik Çekme Boru, metrik
Malzeme	Paslanmaz çelik 1.4301
Boru uzunluğu	6 metre

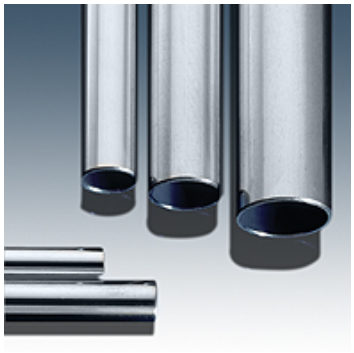

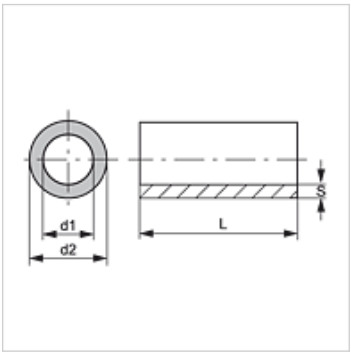

Ürün

Tanım	Ø d2 (mm)	AD toleransı +/- (mm)	Ø d1 (mm)	S (mm)	ID toleransı +/- (mm)	Yüklenme durumu I (bar)	Yüklenme durumu III (bar)
PR 12-2.5 V1	12,0	-	7,0	2,50	-	-	-
PR 14-2.5 V1	14,0	-	9,0	2,50	-	-	-
PR 18-3 V1	18,0	-	12,0	3,00	-	-	-
PR 04-1 V1	4,0	0,08	2,0	1,00	0,15	558	376
PR 05-1 V1	5,0	0,08	3,0	1,00	0,15	447	311
PR 06-1 V1	6,0	0,08	4,0	1,00	0,15	372	265
PR 06-1.5 V1	6,0	0,08	3,0	1,50	0,15	610	405
PR 08-1 V1	8,0	0,08	6,0	1,00	0,15	279	204
PR 08-1.5 V1	8,0	0,08	5,0	1,50	0,15	460	319
PR 10-1 V1	10,0	0,08	8,0	1,00	0,15	223	166
PR 10-1.5 V1	10,0	0,08	7,0	1,50	0,15	369	262
PR 12-1 V1	12,0	0,08	10,0	1,00	0,15	186	140
PR 12-1.5 V1	12,0	0,08	9,0	1,50	0,15	307	223
PR 12-2 V1	12,0	0,08	8,0	2,00	0,15	428	299
PR 12-3 V1	12,0	0,08	6,0	3,00	0,15	670	436
PR 14-2 V1	14,0	0,08	10,0	2,00	0,15	367	261
PR 14-3 V1	14,0	0,08	8,0	3,00	0,15	575	395
PR 15-1.5 V1	15,0	0,08	12,0	1,50	0,15	246	182
PR 16-1 V1	16,0	0,08	14,0	1,00	0,08	152	115
PR 16-2 V1	16,0	0,08	12,0	2,00	0,15	321	232
PR 18-1 V1	18,0	0,08	16,0	1,00	0,08	135	104
PR 18-1.5 V1	18,0	0,08	15,0	1,50	0,08	216	161
PR 18-2 V1	18,0	0,08	14,0	2,00	0,08	297	216
PR 22-1 V1	22,0	0,08	20,0	1,00	0,08	110	85
PR 20-2 V1	20,0	0,08	16,0	2,00	0,15	257	189
PR 22-1.5 V1	22,0	0,08	19,0	1,50	0,08	176	133
PR 22-2 V1	22,0	0,08	18,0	2,00	0,15	233	173
PR 24-2 V1	24,0	0,08	20,0	2,00	0,15	214	160
PR 25-5 V1	25,0	0,08	15,0	5,00	0,15	554	373
PR 28-1 V1	28,0	0,08	26,0	1,00	0,08	87	67
PR 28-2 V1	28,0	0,08	24,0	2,00	0,08	191	143
PR 28-3 V1	28,0	0,08	22,0	3,00	0,15	287	210
PR 28-4 V1	28,0	0,15	20,0	4,00	0,15	384	272
PR 30-2 V1	30,0	0,08	26,0	2,00	0,08	178	134
PR 30-3 V1	30,0	0,08	24,0	3,00	0,08	275	201
PR 30-4 V1	30,0	0,15	22,0	4,00	0,15	358	256
PR 30-5 V1	30,0	0,15	20,0	5,00	0,20	450	313
PR 38-4 V1	38,0	-	30,0	4,00	-	-	-
PR 40-4 V1	40,0	0,15	32,0	4,00	0,20	265	195
PR 40-5 V1	40,0	0,15	30,0	5,00	0,20	337	243
PR 50-1.5 V1	50,0	0,20	47,0	1,50	0,20	63	50
PR 50-2 V1	50,0	0,20	46,0	2,00	0,20	93	72
PR 57-2 V1	57,0	0,25	53,0	2,00	0,25	76	59
PR 64-2 V1	64,0	0,25	60,0	2,00	0,25	68	53
PR 70-2 V1	70,0	0,25	66,0	2,00	0,25	62	48

Titiz kontrole rağmen hatalar önlenemez ve sorumluluk altında bırakmayan bilgiler hakkında hiçbir sorumluluk kabul edilmez.