K-3 BKR L VA

3-way ball valves, L-bore

Özellikler

Çalışma basıncı	max. 63 bar
İşletim ısısı	max. 160 °C
Delme	L-Form
Referans değerleri	Up to 40 °C: 63 bar, 150 °C: 28 bar
Conta	RTFE
El kolu	Stainless steel
Küresel vana	Stainless steel 1.4408



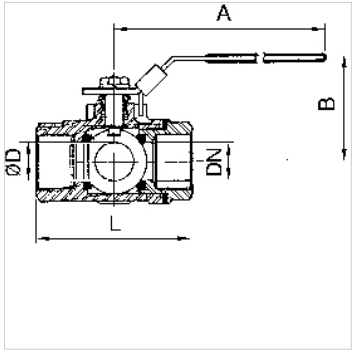

Açıklama

G thread acc. to DIN EN ISO 228-1, with ISO flange plate (acc. to ISO 5211)
Diğer bilgiler, istek üzerinedir.

Açıklama

With L-bore, reduced bore. Version for sealing on all sides with integrated ISO flange plate (ISO 5211). The lever can be turned 360° to allow several switching variants.

Siparişle ilgili bilgiler

For use on devices that have to be vented whenever they are turned off, either because of safety regulations or for technical reasons. The pneumatic devices are disconnected from the system and simultaneously vented each time they are shut off.

Ek bilgiler

G thread acc. DIN EN ISO 228-1

Ürün

Tanım	DN	Mil	A (mm)	B (mm)	L (mm)	Ø D (mm)
K- 07 30 15 02	8	G 1/4	114,0	73,0	80,0	11,0
K- 07 30 15 03	10	G 3/8	114,0	73,0	80,0	11,0
K- 07 30 15 04	15	G 1/2	114,0	73,0	80,0	12,5
K- 07 30 15 05	20	G 3/4	133,0	78,0	87,0	16,0
K- 07 30 15 06	25	G 1	133,0	83,0	100,0	20,0
K- 07 30 15 07	32	G 1 1/4	187,0	92,0	123,0	25,0
K- 07 30 15 08	40	G 1 1/2	187,0	98,0	142,0	31,8
K- 07 30 15 09	50	G 2	187,0	126,0	170,0	38,1

Titiz kontrole rağmen hatalar önlenemez ve sorumluluk altında bırakmayan bilgiler hakkında hiçbir sorumluluk kabul edilmez.