K-BKR EINTEILIG VA

Ball valves

Özellikler

Çalışma basıncı	max. 55 bar (depending on connection size and temperature)
İşletim ısısı	Max. 150 °C
Conta	PTFE
El kolu	Stainless steel 1.4301

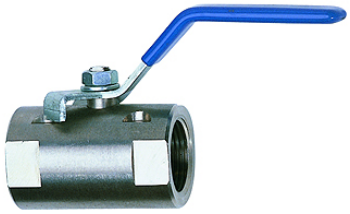

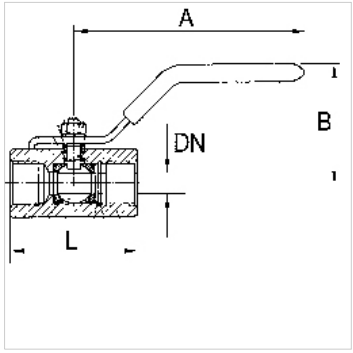

Açıklama

G thread acc. to DIN EN ISO 228-1, with ISO flange plate (acc. to ISO 5211)
Diğer bilgiler, istek üzerinedir.

Açıklama

Full bore with G 1/4 to G 3/8, reduced bore with G 1/2 to G 2

Siparişle ilgili bilgiler

For use on devices that have to be vented whenever they are turned off, either because of safety regulations or for technical reasons. The pneumatic devices are disconnected from the system and simultaneously vented each time they are shut off.

Ürün

Tanım	DN	Mil	A (mm)	B (mm)	L (mm)	Malzeme
K- 07 30 14 94	5	G 1/4	60,0	30,0	39,8	Stainless steel 1.4401/1.4408
K- 07 30 14 95	7	G 3/8	80,0	33,0	44,8	Stainless steel 1.4401/1.4408
K- 07 30 14 96	9	G 1/2	110,0	57,0	56,5	Stainless steel 1.4401/1.4408
K- 07 30 14 97	13	G 3/4	110,0	61,0	60,0	Stainless steel 1.4401/1.4408
K- 07 30 14 98	15	G 1	124,0	70,0	70,0	Stainless steel 1.4401/1.4408
K- 07 30 14 99	20	G 1 1/4	152,0	75,0	77,6	Stainless steel 1.4401/1.4408
K- 07 30 15 00	25	G 1 1/2	150,0	80,0	87,0	Stainless steel 1.4401/1.4408
K- 07 30 15 01	32	G 2	155,0	85,0	102,0	Stainless steel 1.4401/1.4408

Titiz kontrole rağmen hatalar önlenemez ve sorumluluk altında bırakmayan bilgiler hakkında hiçbir sorumluluk kabul edilmez.