K-ABBLV 2

Blow-off safety valves G 1/4

Özellikler

Çalışma basıncı	0.5 - 60 bar
İşletim ısısı	max. 180 °C
Contalar	FKM
Gövde	Brass



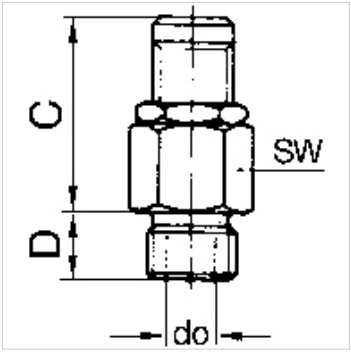

Açıklama

G thread acc. to DIN EN ISO 228-1, with ISO flange plate (acc. to ISO 5211)
Diğer bilgiler, istek üzerinedir.

Açıklama

Manual adjustment of the blow-off pressure (lock nut).

Siparişle ilgili bilgiler

For use on devices that have to be vented whenever they are turned off, either because of safety regulations or for technical reasons. The pneumatic devices are disconnected from the system and simultaneously vented each time they are shut off.

Ek bilgiler

These blow-off valves can also be supplied with a fixed setting and a TÜV type test number. Please ask for an offer.

Ürün

Tanım	Mil	Çalışma basıncı	Püskürtme gücü	C (mm)	TR (mm)	do (mm)	SW (mm)
K- 07 30 29 18	G 1/4	0.5 - 1.0 bar	to 50 l/min	27,0	7,0	3,0	16
K- 07 30 21 95	G 1/4	1.0 - 4.0 bar	to 200 l/min	27,0	7,0	3,0	16
K- 07 30 21 96	G 1/4	3.0 - 7.0 bar	to 350 l/min	27,0	7,0	3,0	16
K- 07 30 21 97	G 1/4	6.0 - 12.0 bar	to 650 l/min	27,0	7,0	3,0	16
K- 07 30 21 98	G 1/4	10.0 - 18.0 bar	to 870 l/min	27,0	7,0	3,0	16
K- 07 30 21 99	G 1/4	16.0 - 32.0 bar	to 1600 l/min	27,0	7,0	3,0	16
K- 07 30 22 00	G 1/4	30.0 - 60.0 bar	to 3000 l/min	27,0	7,0	3,0	16

Titiz kontrole rağmen hatalar önlenemez ve sorumluluk altında bırakmayan bilgiler hakkında hiçbir sorumluluk kabul edilmez.