K-PRAEZI DRG MANO HANSA

Precision pressure regulators

Özellikler

Giriş basıncı	Max. 16 bar
Sıcaklık sahası	-10 °C to +50 °C
Akışkanlar	Basınçlı hava
Bağlantı vida dişi	Material: Die-cast zinc
Gövde	Material: Grivory® (PA 66)
Membran	NBR
Öz hava tüketimi	2.6 l/min at P2 = 6 bar (depending on secondary pressure)
Akış değeri ölçümü	At P1 = 10 bar, P2 = 6.3 bar and pressure drop Δp = 1 bar



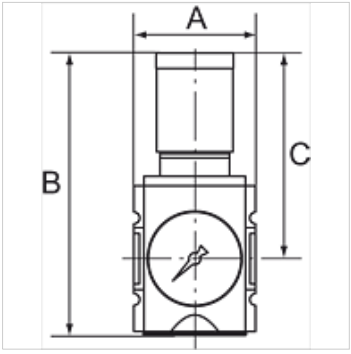

Açıklama

Diğer bilgiler, istek üzerinedir.

Açıklama

Precision diaphragm pressure regulators with self-relieving design and excellent flow rates in modern design for applications requiring an extremely accurate working pressure. The regulator button can be latched and locked.

Siparişle ilgili bilgiler

The price does not include a key lock. Please order separately.

Ürün

Tanım	Mil	Ayar aralığı	Akış (L/min)	A (mm)	B	C (mm)	Model ebadı
K- 07 25 09 46	G 1/4	0.1 - 1 bar	2200	52,0	128,5 mm	95,5	1
K- 07 25 09 47	G 1/4	0.1 - 2 bar	2200	52,0	128,5 mm	95,5	1
K- 07 25 09 48	G 1/4	0.2 - 4 bar	2200	52,0	128,5 mm	95,5	1
K- 07 25 09 49	G 1/4	0.5 - 8 bar	2200	52,0	128,5 mm	95,5	1
K- 07 25 09 50	G 1/4	0.5 - 10 bar	2200	52,0	128,5 mm	95,5	1
K- 07 25 09 51	G 3/8	0.1 - 1 bar	2700	52,0	128,5 mm	95,5	1
K- 07 25 09 52	G 3/8	0.1 - 2 bar	2700	52,0	128,5 mm	95,5	1
K- 07 25 09 53	G 3/8	0.2 - 4 bar	2700	52,0	128,5 mm	95,5	1
K- 07 25 09 54	G 3/8	0.5 - 8 bar	2700	52,0	128,5 mm	95,5	1
K- 07 25 09 55	G 3/8	0.5 - 10 bar	2700	52,0	128,5 mm	95,5	1
K- 07 25 09 56	G 3/8	0.1 - 1 bar	4300	63,0	149,5 mm	110,0	2
K- 07 25 09 57	G 3/8	0.1 - 2 bar	4300	63,0	149,5 mm	110,0	2
K- 07 25 09 58	G 3/8	0.2 - 4 bar	4300	63,0	149,5 mm	110,0	2
K- 07 25 09 59	G 3/8	0.5 - 8 bar	4300	63,0	149,5 mm	110,0	2
K- 07 25 09 60	G 3/8	0.5 - 10 bar	4300	63,0	149,5 mm	110,0	2
K- 07 25 09 61	G 1/2	0.1 - 1 bar	5000	63,0	149,5 mm	110,0	2
K- 07 25 09 62	G 1/2	0.1 - 2 bar	5000	63,0	149,5 mm	110,0	2
K- 07 25 09 63	G 1/2	0.2 - 4 bar	5000	63,0	149,5 mm	110,0	2
K- 07 25 09 64	G 1/2	0.5 - 8 bar	5000	63,0	149,5 mm	110,0	2
K- 07 25 09 65	G 1/2	0.5 - 10 bar	5000	63,0	149,5 mm	110,0	2

Aksesuar

K-STECKSCHLOSS	Key lock

Yedek Parçalar

K-HALTERBAUSATZ HANSA	Holder HANSA
K-SCHALTTAFELMUTTER HANSA	Nut HANSA
K-DICHTSATZ HANSA	Set of seals HANSA

Titiz kontrole rağmen hatalar önlenemez ve sorumluluk altında bırakmayan bilgiler hakkında hiçbir sorumluluk kabul edilmez.