# K-PRAEZI DRG DRUCKVER HANSA

Precision pressure regulators with continuous pressure supply

## Özellikler

| | |
|---|---|
| **Giriş basıncı** | Max. 16 bar |
| **Sıcaklık sahası** | -10 °C to +50 °C |
| **Akışkanlar** | Basınçlı hava |
| **Bağlantı vida dişi** | Material: Die-cast zinc |
| **Gövde** | Material: Grivory® (PA 66) |
| **Membran** | NBR |
| **Öz hava tüketimi** | 2.6 l/min at P2 = 6 bar (depending on secondary pressure) |
| **Akış değeri ölçümü** | At P1 = 10 bar, P2 = 6.3 bar and pressure drop Δp = 1 bar |



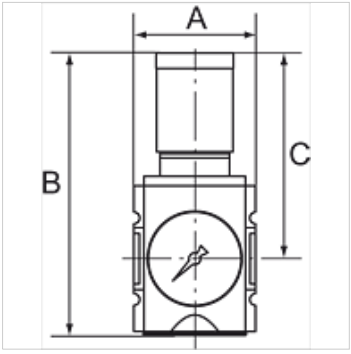


## Açıklama

Diğer bilgiler, istek üzerinedir.

## Açıklama

Precision diaphragm pressure regulators with self-relieving design and excellent flow rates in modern design for mounting side by side. <br>By assembling two or more controllers together, it is possible to supply several working air circuits with different pressures via a single supply line.

## Siparişle ilgili bilgiler

The price does not include a key lock. Please order separately.

## Ürün

| Tanım | Mil | Ayar aralığı | Akış (L/min) | A (mm) | B | C (mm) |
|---|---|---|---|---|---|---|
| **K- 07 25 09 66** | G 1/4 | 0.1 - 1 bar | 2200 | 52,0 | 128,5 mm | 95,5 |
| **K- 07 25 09 67** | G 1/4 | 0.1 - 2 bar | 2200 | 52,0 | 128,5 mm | 95,5 |
| **K- 07 25 09 68** | G 1/4 | 0.2 - 4 bar | 2200 | 52,0 | 128,5 mm | 95,5 |
| **K- 07 25 09 69** | G 1/4 | 0.5 - 8 bar | 2200 | 52,0 | 128,5 mm | 95,5 |
| **K- 07 25 09 70** | G 1/4 | 0.5 - 10 bar | 2200 | 52,0 | 128,5 mm | 95,5 |
| **K- 07 25 09 71** | G 3/8 | 0.1 - 1 bar | 2700 | 52,0 | 128,5 mm | 95,5 |
| **K- 07 25 09 72** | G 3/8 | 0.1 - 2 bar | 2700 | 52,0 | 128,5 mm | 95,5 |
| **K- 07 25 09 73** | G 3/8 | 0.2 - 4 bar | 2700 | 52,0 | 128,5 mm | 95,5 |
| **K- 07 25 09 74** | G 3/8 | 0.5 - 8 bar | 2700 | 52,0 | 128,5 mm | 95,5 |
| **K- 07 25 09 75** | G 3/8 | 0.5 - 10 bar | 2700 | 52,0 | 128,5 mm | 95,5 |
| **K- 07 25 09 76** | G 3/8 | 0.1 - 1 bar | 4300 | 63,0 | 149,5 mm | 110,0 |
| **K- 07 25 09 77** | G 3/8 | 0.1 - 2 bar | 4300 | 63,0 | 149,5 mm | 110,0 |
| **K- 07 25 09 78** | G 3/8 | 0.2 - 4 bar | 4300 | 63,0 | 149,5 mm | 110,0 |
| **K- 07 25 09 79** | G 3/8 | 0.5 - 8 bar | 4300 | 63,0 | 149,5 mm | 110,0 |
| **K- 07 25 09 80** | G 3/8 | 0.5 - 10 bar | 4300 | 63,0 | 149,5 mm | 110,0 |
| **K- 07 25 09 81** | G 1/2 | 0.1 - 1 bar | 5000 | 63,0 | 149,5 mm | 110,0 |
| **K- 07 25 09 82** | G 1/2 | 0.1 - 2 bar | 5000 | 63,0 | 149,5 mm | 110,0 |
| **K- 07 25 09 83** | G 1/2 | 0.2 - 4 bar | 5000 | 63,0 | 149,5 mm | 110,0 |
| **K- 07 25 09 84** | G 1/2 | 0.5 - 8 bar | 5000 | 63,0 | 149,5 mm | 110,0 |
| **K- 07 25 09 85** | G 1/2 | 0.5 - 10 bar | 5000 | 63,0 | 149,5 mm | 110,0 |

## Aksesuar

| | |
|---|---|
| **K-STECKSCHLOSS** | Key lock |

## Yedek Parçalar

| | |
|---|---|
| **K-HALTERBAUSATZ HANSA** | Holder HANSA |
| **K-SCHALTTAFELMUTTER HANSA** | Nut HANSA |
| **K-DICHTSATZ HANSA** | Set of seals HANSA |

*Titiz kontrole rağmen hatalar önlenemez ve sorumluluk altında bırakmayan bilgiler hakkında hiçbir sorumluluk kabul edilmez.*