K-WTEH KOMBI PC-BEHAELTER H ABLV

Combination service units with polycarbonate bowl and manual drain valve

HANSA-FLEX

Özellikler

Giriş basıncı	Max. 16 bar (polycarbonate bowl), Max. 25 bar (metal bowl)
Akışkan sıcaklığı	max. 50 °C
Ortam sıcaklığı	Max. 50 °C
Filtre ünitesindeki delik genişliği	50 µm
Yalıtım malzemesi	NBR
Gövde	Die-cast zinc, Spring bonnet; PA
Damla örtüsü	PA
Akış değeri ölçümü	At P1 = 8 bar, P2 = 6 bar and pressure drop Δp = 1 bar



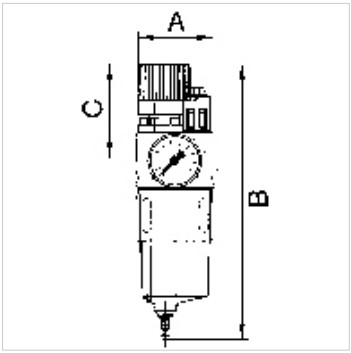

Açıklama

Diğer bilgiler, istek üzerinedir.

Açıklama

A filter, pressure regulator and oil-mist lubricator combined in a single device with an extremely compact design. The pressure setting can be locked by pushing the knob down. Oil can be filled under pressure.

Ürün

Tanım	Mil	Ayar aralığı	Akış (L/min)	A (mm)	B	C (mm)
K- 07 25 08 44	G 1/4	0.5 - 10 bar	1400	67,0	217,0 mm	68,5
K- 07 25 08 46	G 1/4	0.5 - 16 bar	1000	67,0	217,0 mm	68,5
K- 07 25 08 48	G 3/8	0.5 - 10 bar	1400	67,0	217,0 mm	68,5
K- 07 25 08 50	G 3/8	0.5 - 16 bar	1000	67,0	217,0 mm	68,5
K- 07 25 08 52	G 1/2	0.5 - 10 bar	1400	65,0	217,0 mm	68,5
K- 07 25 08 54	G 1/2	0.5 - 16 bar	1000	65,0	217,0 mm	68,5
K- 07 25 08 56	G 3/4	0.5 - 10 bar	3400	97,0	296,5 mm	96,5
K- 07 25 08 58	G 3/4	0.5 - 16 bar	2800	97,0	296,5 mm	96,5
K- 07 25 08 60	G 1	0.5 - 10 bar	3400	93,0	296,5 mm	96,5
K- 07 25 08 62	G 1	0.5 - 16 bar	2800	93,0	296,5 mm	96,5

Yedek Parçalar

K-HALTERBAUSATZ SERIE 81	Holder for series 81
K-ERSATZBEHAEL KOMBI	Spare tank
K-SCHUTZKORB G	Protective cage
K-VERSCHLEI-SATZ	Set of wearing parts
K-TROPFAUFSATZ POLYCARBO	Drip attachment polycarbonate
K-TROPFAUFSATZ METALL	Drip attachment metal
K-FILTERELEMENT	Filter element
K-ABLASSVENTIL AUTO	Fully-automatic drain valve with Adapter G 1/8
K-RD NIPPEL KURZ 1	Reducing nipples, short type
K-XV AGM 2	Double nipples, parallel male thread

Titiz kontrole rağmen hatalar önlenemez ve sorumluluk altında bırakmayan bilgiler hakkında hiçbir sorumluluk kabul edilmez.