K-WTEH 3-TLG MET M ABLV TRO STANDAD

Service units with metal bowl and manual drain valve, metal sight dome

Özellikler

Giriş basıncı	Max. 16 bar (polycarbonate bowl / bowl guard), Max. 25 bar (metal bowl)
Ayar aralığı	0.5 to 10 bar (polycarbonate bowl / bowl guard)0.5 to 16 bar (metal bowl)
Akışkan sıcaklığı	max. 60 °C
Ortam sıcaklığı	Max. 60 °C
Filtre ünitesindeki delik genişliği	5 µm (G 1/4 / G 3/8 / G 1/2), 40 µm (G 3/8 / G 3/4 / G 1 / G 1 1/4 / G 1 1/2)
Yalıtım malzemesi	NBR
Gövde	Die-cast zinc / Aluminium, painted silver
Damla örtüsü	PA (polycarbonate bowl), Zinc-glass-NBR (metal bowl)
Akış değeri ölçümü	At P1 = 8 bar, P2 = 6 bar and pressure drop Δp = 1 bar
Diğer bilgiler	User manual on request

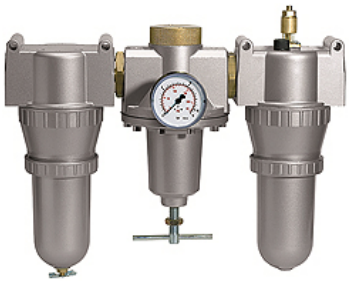

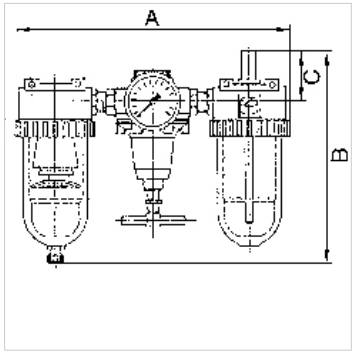

Açıklama

Three-piece service units consisting of a reversible diaphragm pressure regulator, independent of inlet pressure, with self-relieving design, centrifugal separator and proportional lubricator.

Ürün

Tanım	Mil	Akış (L/min)	A (mm)	B	C (mm)	DN	Ø manometre
K- 07 25 14 50	G 1/4	600	172,0	184,5 mm	51,0	6	50
K- 07 25 14 57	G 3/8	600	185,0	184,5 mm	51,0	6	50
K- 07 25 14 60	G 3/8	1400	232,0	210,0 mm	51,0	6	50
K- 07 25 14 63	G 1/2	3200	259,0	226,0 mm	55,0	15	63
K- 07 25 14 66	G 3/4	3200	302,0	230,5 mm	58,0	20	63
K- 07 25 14 69	G 1	3200	302,0	230,5 mm	58,0	25	63
K- 07 25 14 72	G 1 1/4	5000	395,0	316,0 mm	70,0	25	63
K- 07 25 14 75	G 1 1/2	5000	395,0	316,0 mm	70,0	35	63

Yedek Parçalar

K-HALTERBAUSATZ STANDARD	Holder
K-SCHUTZKORB G	Protective cage
K-VERSCHLEI-SATZ	Set of wearing parts
K-FILTERELEMENT	Filter element
K-TROPFAUFSATZ POLYCARBO	Drip attachment polycarbonate
K-LOESBARE DOPPELNIPPEL MS	Double nipples
K-XV AGM MS NI	Double nipples, parallel male thread, nickel-plated brass
K-RD NIPPEL MS NI	Reducing nipples - nickel-plated brass
K-TROPFAUFSATZ METALL	Drip attachment metal
K-ABLASSVENTIL AUTO	Fully-automatic drain valve with Adapter G 1/8
K-AUTOMAT ABLASSVENTIL	Automatic drain valve

Titiz kontrole rağmen hatalar önlenemez ve sorumluluk altında bırakmayan bilgiler hakkında hiçbir sorumluluk kabul edilmez.