# K-DRG VARIOBLOC
Pressure regulators

HANSA-FLEX

## Özellikler

| | |
|---|---|
| **Giriş basıncı** | Max. 25 bar |
| **Akışkan sıcaklığı** | max. 50 °C |
| **Ortam sıcaklığı** | Max. 50 °C |
| **Yalıtım malzemesi** | NBR |
| **Yay kapağı** | POM |
| **Gövde** | Die-cast zinc |
| **Membran** | NBR |
| **Akış değeri ölçümü** | At P1 = 10 bar, P2 = 6 bar and pressure drop Δp = 1 bar |



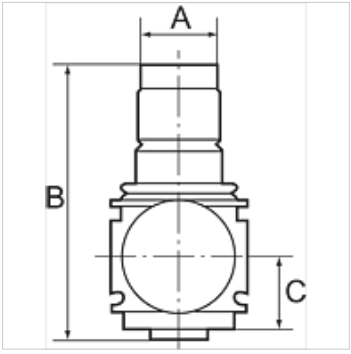


## Açıklama
Diğer bilgiler, istek üzerinedir.

## Açıklama
Reversible diaphragm pressure regulators, independent of inlet pressure, with self-relieving design. The pressure setting can be locked by pushing the knob down. Approved series in modern industrial design, with the following key benefits: Simple handling, Convenient modular assembly thanks to innovative fasteners, Excellent flow values.

## Siparişle ilgili bilgiler
Pressure regulators are also available in lockable version. Please ask for more information.

## Ürün

| Tanım | Mil | Ayar aralığı | Akış (L/min) | A (mm) | B | C (mm) |
|---|---|---|---|---|---|---|
| **K- 07 25 04 18** | G 1/4 | 0.5 - 6 bar | 2000 | 48,0 | 98,0 mm | 26,0 |
| **K- 07 25 04 19** | G 1/4 | 0.5 - 10 bar | 2000 | 48,0 | 98,0 mm | 26,0 |
| **K- 07 25 04 20** | G 1/4 | 0.5 - 16 bar | 2000 | 48,0 | 98,0 mm | 26,0 |
| **K- 07 25 04 21** | G 3/8 | 0.5 - 6 bar | 3200 | 48,0 | 98,0 mm | 26,0 |
| **K- 07 25 04 22** | G 3/8 | 0.5 - 10 bar | 3200 | 48,0 | 98,0 mm | 26,0 |
| **K- 07 25 04 23** | G 3/8 | 0.5 - 16 bar | 3200 | 48,0 | 98,0 mm | 26,0 |
| **K- 07 25 04 24** | G 1/2 | 0.5 - 6 bar | 7000 | 70,0 | 134,0 mm | 32,5 |
| **K- 07 25 04 25** | G 1/2 | 0.5 - 10 bar | 7000 | 70,0 | 134,0 mm | 32,5 |
| **K- 07 25 04 26** | G 1/2 | 0.5 - 16 bar | 7000 | 70,0 | 134,0 mm | 32,5 |
| **K- 07 25 04 27** | G 3/4 | 0.5 - 6 bar | 8000 | 70,0 | 134,0 mm | 32,5 |
| **K- 07 25 04 28** | G 3/4 | 0.5 - 10 bar | 8000 | 70,0 | 134,0 mm | 32,5 |
| **K- 07 25 04 29** | G 3/4 | 0.5 - 16 bar | 8000 | 70,0 | 134,0 mm | 32,5 |
| **K- 07 25 04 30** | G 1 | 0.5 - 6 bar | 8000 | 124,0 | 134,0 mm | 32,5 |
| **K- 07 25 04 31** | G 1 | 0.5 - 10 bar | 8000 | 124,0 | 134,0 mm | 32,5 |
| **K- 07 25 04 32** | G 1 | 0.5 - 16 bar | 8000 | 124,0 | 134,0 mm | 32,5 |

## Yedek Parçalar

| | |
|---|---|
| **K-VERSCHLEI-SATZ VARIOBLOC** | Set of wearing parts |

*Titiz kontrole rağmen hatalar önlenemez ve sorumluluk altında bırakmayan bilgiler hakkında hiçbir sorumluluk kabul edilmez.*