K-DRG DRVS VARIOBLOC

Pressure regulators with pressure supply at both ends

Özellikler

Giriş basıncı	Max. 25 bar
Akışkan sıcaklığı	max. 50 °C
Ortam sıcaklığı	Max. 50 °C
Yalıtım malzemesi	NBR
Yay kapağı	POM-brass
Gövde	Die-cast zinc
Akış değeri ölçümü	At P1 = 10 bar, P2 = 6 bar and pressure drop Δp = 1 bar



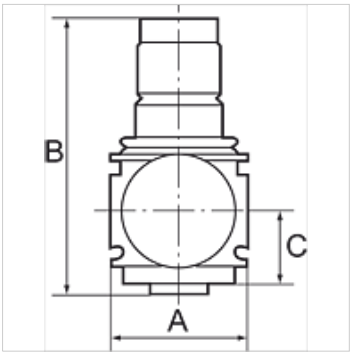

Açıklama

Diğer bilgiler, istek üzerinedir.

Açıklama

Diaphragm pressure regulators with self-relieving design for mounting side by side. The pressure setting can be locked by pushing the knob down.
By assembling two or more controllers together, it is possible to supply several working air circuits with different output pressures via a single supply line.

Siparişle ilgili bilgiler

Pressure regulators are also available in lockable version. Please ask for more information.

Ürün

Tanım	Mil	Ayar aralığı	Akış (L/min)	A (mm)	B	C (mm)
K- 07 25 04 33	G 1/4	0.5 - 6 bar	1800	48,0	98,0 mm	26,0
K- 07 25 04 34	G 1/4	0.5 - 10 bar	1800	48,0	98,0 mm	26,0
K- 07 25 04 35	G 1/4	0.5 - 16 bar	1800	48,0	98,0 mm	26,0
K- 07 25 04 36	G 3/8	0.5 - 6 bar	1800	48,0	98,0 mm	26,0
K- 07 25 04 37	G 3/8	0.5 - 10 bar	1800	48,0	98,0 mm	26,0
K- 07 25 04 38	G 3/8	0.5 - 16 bar	1800	48,0	98,0 mm	26,0

Yedek Parçalar

K-VERSCHLEI-SATZ VARIOBLOC	Set of wearing parts

Titiz kontrole rağmen hatalar önlenemez ve sorumluluk altında bırakmayan bilgiler hakkında hiçbir sorumluluk kabul edilmez.