K-WTEH 3-TLG PC-BEHAEL VARIOBLOC

Service units, 3-piece with polycarbonate bowl

Özellikler

Giriş basıncı	Max. 16 bar (polycarbonate bowl), Max. 20 bar (metal bowl)
Akışkan sıcaklığı	max. 50 °C
Ortam sıcaklığı	Max. 50 °C (polycarbonate bowl), Max. 80 ° C (metal bowl)
Filtre ünitesindeki delik genişliği	40 µm
Yalıtım malzemesi	NBR
Yay kapağı	POM
Gövde	Die-cast zinc
Membran	NBR
Damla örtüsü	PA
Drain valve	Manual
Akış değeri ölçümü	At P1 = 10 bar, P2 = 6 bar and pressure drop Δp = 1 bar



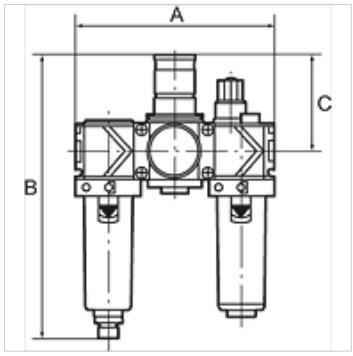

Açıklama

Diğer bilgiler, istek üzerinedir.

Açıklama

Two or three-piece service units consisting of a reversible diaphragm pressure regulator, independent of inlet pressure, with self-relieving design, combined with a centrifugal separator and a proportional lubricator. Approved series in modern industrial design, with the following key benefits: Simple handling, Convenient modular assembly thanks to innovative fasteners, Excellent flow values.

Siparişle ilgili bilgiler

Service units are also available with bowl guard or metal bowl. Service units are also available in other control ranges (0.5 - 6 bar and 0.5 - 16 bar) and in lockable version. Please ask for more information.

Ek bilgiler

Service units are also available with bowl guard or metal bowl. Service units are also available in other control ranges.

Ürün

Tanım	Mil	Ayar aralığı	Akış (L/min)	A (mm)	B	C (mm)
K- 07 25 14 11	G 1/4	0.5 - 10 bar	1500	144,0	201,0 mm	68,0
K- 07 25 14 13	G 3/8	0.5 - 10 bar	1800	144,0	201,0 mm	68,0
K- 07 25 14 15	G 1/2	0.5 - 10 bar	3400	210,0	247,0 mm	98,0
K- 07 25 14 17	G 3/4	0.5 - 10 bar	5000	210,0	247,0 mm	98,0
K- 07 25 14 19	G 1	0.5 - 10 bar	5000	264,0	247,0 mm	98,0

Yedek Parçalar

K-VERSCHLEI-SATZ VARIOBLOC	Set of wearing parts
K-FILTERELEMENT VARIOBLOC	Filter element
K-TROPFAUFSATZ VARIOBLOC	Drip attachment
K-ERSATZBEHAELTER VARIOBLOC POLY	Spare tank Polycarbonat
K-ABLASSVENTIL AUTO	Fully-automatic drain valve with Adapter G 1/8
K-TROPFAUFSATZ METALL	Drip attachment metal

Titiz kontrole rağmen hatalar önlenemez ve sorumluluk altında bırakmayan bilgiler hakkında hiçbir sorumluluk kabul edilmez.