K-BKR KL SERIE 375

Ball valves, 375 series

Özellikler

Çalışma basıncı	max. 70 bar (depending on temperature and nominal size)
Referans değerleri	G 1/4 to G 1: 20 °C: 70 bar, 60 °C: 65 bar, 100 °C: 45 bar, 150 °C: 7 bar, 180 °C: 4 bar, 200 °C: 0 bar G 1 1/4 to G 1 1/2: 20 °C: 70 bar, 60 °C: 55 bar, 100 °C: 35 bar, 150 °C: 7 bar, 180 °C: 4 bar, 200 °C: 0 bar G 2: 20 °C: 60 bar, 60 °C: 40 bar, 10
İşletim ısısı	200 °C at 0 bar
Conta	15 % RPTFE (glass fibre reinforced PTFE)
El kolu	Stainless steel 1.4301

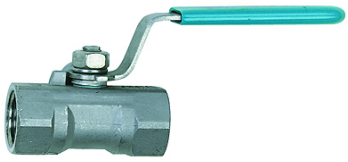

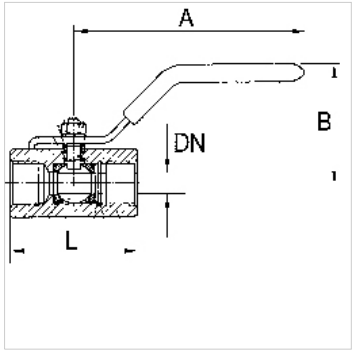

Açıklama

G thread acc. to DIN EN ISO 228-1, with ISO flange plate (acc. to ISO 5211)
Diğer bilgiler, istek üzerinedir.

Siparişle ilgili bilgiler

For use on devices that have to be vented whenever they are turned off, either because of safety regulations or for technical reasons. The pneumatic devices are disconnected from the system and simultaneously vented each time they are shut off.

Ek bilgiler

G thread acc. DIN EN ISO 228-1

Ürün

Tanım	DN	Mil	A (mm)	B (mm)	L (mm)	Malzeme
K- 07 30 15 36	5	G 1/4	69,0	34,0	39,0	Stainless steel 1.4401/1.4408
K- 07 30 15 37	7	G 3/8	83,0	38,0	44,0	Stainless steel 1.4401/1.4408
K- 07 30 15 38	10	G 1/2	96,0	41,0	59,0	Stainless steel 1.4401/1.4408
K- 07 30 15 39	13	G 3/4	96,0	45,0	60,0	Stainless steel 1.4401/1.4408
K- 07 30 29 80	16	G 1	116,0	52,0	72,0	Stainless steel 1.4401/1.4408
K- 07 30 29 81	20	G 1 1/4	116,0	57,0	77,0	Stainless steel 1.4401/1.4408
K- 07 30 29 82	25	G 1 1/2	158,0	62,0	84,0	Stainless steel 1.4401/1.4408
K- 07 30 29 83	32	G 2	158,0	68,0	100,0	Stainless steel 1.4401/1.4408

Titiz kontrole rağmen hatalar önlenemez ve sorumluluk altında bırakmayan bilgiler hakkında hiçbir sorumluluk kabul edilmez.