K-BKR SCHW STAHLHEBEL IG IG

Ball valves with black steel lever, lighweight type, female/female thread

Özellikler

Kullanım Alanı	Compressed air, water, non-toxic and non-corrosive gases, heating systems, agriculture
Çalışma basıncı	Max. 40 bar
İşletim ısısı	-15 °C to +90 °C
Dişli açıklaması	G thread acc. DIN EN ISO 228-1
Gövde	Nickel-plated brass
Kol	Steel, with plastic coating
Bilye	Chrome-plated brass
Bilye contası	PTFE
Mil contası	HNBR / EPDM / PTFE. 2 O-Rings (HNBR / EPDM) 1 gasket (PTFE) additional PTFE-gasket

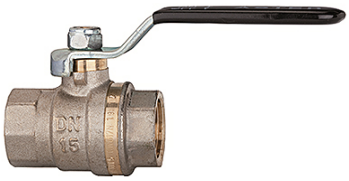

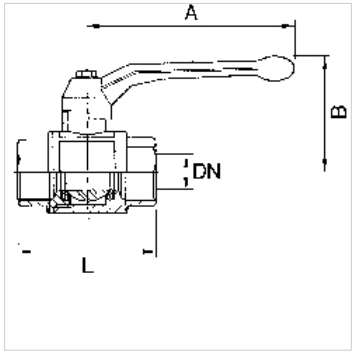

Açıklama

Diğer bilgiler, istek üzerinedir.

Ürün

Tanım	DN	Mil	A (mm)	B (mm)	L (mm)
K- 07 30 00 83	8	G 1/4	85,0	42,0	39,0
K- 07 30 00 87	10	G 3/8	85,0	42,0	43,0
K- 07 30 00 91	15	G 1/2	85,0	46,0	50,0
K- 07 30 00 95	20	G 3/4	105,0	53,0	58,0
K- 07 30 00 99	25	G 1	105,0	57,0	69,0
K- 07 30 01 03	32	G 1 1/4	130,0	70,0	81,0
K- 07 30 01 07	40	G 1 1/2	130,0	76,0	93,0
K- 07 30 01 11	50	G 2	165,0	92,0	110,0

Titiz kontrole rağmen hatalar önlenemez ve sorumluluk altında bırakmayan bilgiler hakkında hiçbir sorumluluk kabul edilmez.