K-BKR ROT STAHLHEBEL IG AG

Ball valves with red steel lever, lighweight type, female/male thread

Özellikler

Kullanım Alanı	Compressed air, water, non-toxic and non-corrosive gases, heating systems, agriculture
Çalışma basıncı	Max. 40 bar
İşletim ısısı	-15 °C to +90 °C
Dişli açıklaması	G thread acc. DIN EN ISO 228-1
Gövde	Nickel-plated brass
Kol	Steel, with plastic coating
Bilye	Chrome-plated brass
Bilye contası	PTFE
Mil contası	HNBR / EPDM / PTFE. 2 O-Rings (HNBR / EPDM) 1 gasket (PTFE) additional PTFE-gasket

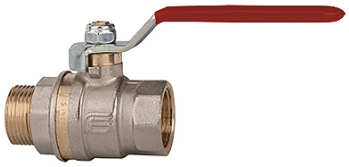

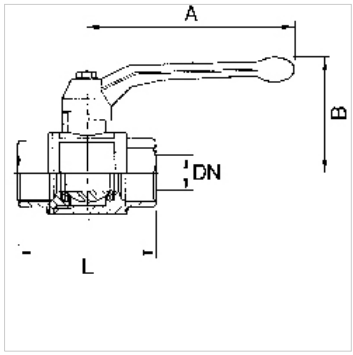

Açıklama

Diğer bilgiler, istek üzerinedir.

Ürün

Tanım	DN	Mil	A (mm)	B (mm)	L (mm)
K- 07 30 00 50	8	G 1/4	85,0	42,0	44,0
K- 07 30 00 54	10	G 3/8	85,0	42,0	51,0
K- 07 30 00 58	15	G 1/2	85,0	46,0	60,0
K- 07 30 00 62	20	G 3/4	105,0	53,0	70,0
K- 07 30 00 66	25	G 1	105,0	57,0	79,0
K- 07 30 00 70	32	G 1 1/4	130,0	70,0	91,0
K- 07 30 00 74	40	G 1 1/2	130,0	76,0	104,0
K- 07 30 00 78	50	G 2	165,0	92,0	122,0

Titiz kontrole rağmen hatalar önlenemez ve sorumluluk altında bırakmayan bilgiler hakkında hiçbir sorumluluk kabul edilmez.