# K-ZFL ABSP-KLAPPEN DOPPEL

Butterfly valves, with double-acting actuator, min. pilot pressure 5 bar

HANSA FLEX

## Özellikler

| | |
|---|---|
| **Model** | Pneumatic actuators, in double- or single acting version |
| **Çalışma basıncı** | Max. 16 bar |
| **İşletim ısısı** | -15 °C to +120 °C |
| **Akışkanlar** | Water / steam, salt water, salt water, ester, ketone, alkali, caustic soda, sodium hydroxide. Not recommended for hydrocarbons |
| **Kumanda basıncı** | 5.5 bar |
| **Valf adaptörü** | Supplied as standard, operated by a 3/2- or 5/2-way valve |
| **Dönüş açısı** | 90 ° |
| **Tahrik** | aluminium eloxed |
| **Tahrik contası** | NBR |
| **Gövde** | Grey cast iron GG25 epoxy resin coated, RAL 5015 |
| **Conta** | EPDM |
| **Mil** | SS416 |
| **Mil contası** | EPDM |
| **Çalıştırma** | |



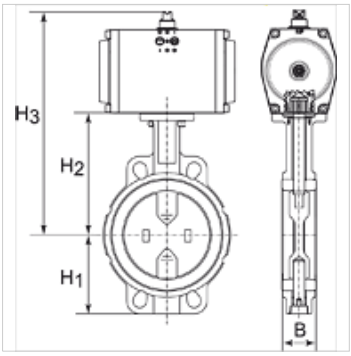


## Açıklama

Diğer bilgiler, istek üzerinedir.

## Ürün

| Tanım | Pul | DN | B (mm) | H1 (mm) | H2 (mm) | H3 (mm) | L (mm) |
|---|---|---|---|---|---|---|---|
| **K- 07 30 03 28** | Stainless Steel CF8M/1.4404 | 40 | 38,0 | 68,0 | 108,0 | 212,0 | 94,0 |
| **K- 07 30 03 29** | Stainless Steel CF8M/1.4404 | 50 | 47,0 | 71,0 | 143,0 | 247,0 | 100,0 |
| **K- 07 30 03 30** | Stainless Steel CF8M/1.4404 | 65 | 49,0 | 78,0 | 155,0 | 259,0 | 115,0 |
| **K- 07 30 03 31** | Stainless Steel CF8M/1.4404 | 80 | 47,0 | 89,0 | 162,0 | 280,0 | 127,0 |
| **K- 07 30 03 32** | Stainless Steel CF8M/1.4404 | 100 | 56,0 | 102,0 | 178,0 | 308,0 | 163,0 |
| **K- 07 30 03 33** | Stainless Steel CF8M/1.4404 | 125 | 59,0 | 123,0 | 191,0 | 321,0 | 190,0 |
| **K- 07 30 03 35** | Stainless Steel CF8M/1.4404 | 150 | 59,0 | 138,0 | 205,0 | 352,0 | 216,0 |

*Titiz kontrole rağmen hatalar önlenemez ve sorumluluk altında bırakmayan bilgiler hakkında hiçbir sorumluluk kabul edilmez.*