# K-WTEH 3-TLG PC SCHU VARIOBLOC

Service units, 3-piece with polycarbonate bowl and bowl guard

## Özellikler

| | |
|---|---|
| **Giriş basıncı** | Max. 16 bar (polycarbonate bowl), Max. 20 bar (metal bowl) |
| **Akışkan sıcaklığı** | max. 50 °C |
| **Ortam sıcaklığı** | Max. 50 °C (polycarbonate bowl), Max. 80 ° C (metal bowl) |
| **Filtre ünitesindeki delik genişliği** | 40 µm |
| **Yalıtım malzemesi** | NBR |
| **Yay kapağı** | POM |
| **Gövde** | Die-cast zinc |
| **Membran** | NBR |
| **Damla örtüsü** | PA |
| **Drain valve** | Manual |
| **Akış değeri ölçümü** | At P1 = 10 bar, P2 = 6 bar and pressure drop Δp = 1 bar |



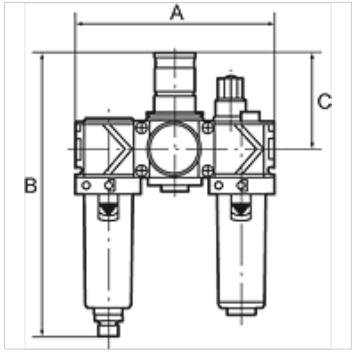


## Açıklama

Diğer bilgiler, istek üzerinedir.

## Açıklama

Two or three-piece service units consisting of a reversible diaphragm pressure regulator, independent of inlet pressure, with self-relieving design, combined with a centrifugal separator and a proportional lubricator. Approved series in modern industrial design, with the following key benefits: Simple handling, Convenient modular assembly thanks to innovative fasteners, Excellent flow values.

## Siparişle ilgili bilgiler

Service units are also available with bowl guard or metal bowl. Service units are also available in other control ranges (0.5 - 6 bar and 0.5 - 16 bar) and in lockable version. Please ask for more information.

## Ek bilgiler

Service units are also available with bowl guard or metal bowl. Service units are also available in other control ranges.

## Ürün

| Tanım | Mil | Ayar aralığı | Akış (L/min) | A (mm) | B | C (mm) |
|---|---|---|---|---|---|---|
| **K- 07 25 22 86** | G 1/4 | 0.5 - 10 bar | 1500 | 144,0 | 201,0 mm | 68,0 |
| **K- 07 25 22 85** | G 3/8 | 0.5 - 10 bar | 1800 | 144,0 | 201,0 mm | 68,0 |
| **K- 07 25 22 84** | G 1/2 | 0.5 - 10 bar | 3400 | 210,0 | 247,0 mm | 98,0 |
| **K- 07 25 22 83** | G 3/4 | 0.5 - 10 bar | 5000 | 210,0 | 247,0 mm | 98,0 |
| **K- 07 25 22 82** | G 1 | 0.5 - 10 bar | 5000 | 264,0 | 247,0 mm | 98,0 |

*Titiz kontrole rağmen hatalar önlenemez ve sorumluluk altında bırakmayan bilgiler hakkında hiçbir sorumluluk kabul edilmez.*