K-DRUCKVERST MANO H SCHALLD VBA

Booster Regulator, pressure gauge, high-noise reduction silencer, VBA

Özellikler

Model	with pressure gauge and with high performance muffler
min. çalışma basıncı	0.20 MPa
Bağlantı manometre pnömatik	Rc 1/8
Bağlantı pnömatik manometre sayısı	2
maks. giriş basıncı	0,1 to 1,0 MPa
Akışkan sıcaklığı	+2 °C to +50 °C
Ortam sıcaklığı	+2 °C bis +50 °C
Akışkanlar	Basınçlı hava

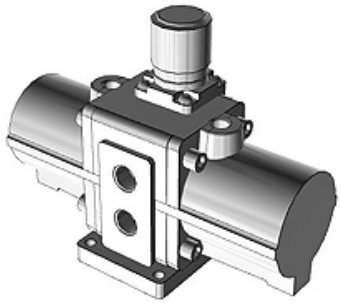

Açıklama

Booster regulator, series VBA, increases pressure only where the force is inadequate because of a low network pressure (energy saving measure), no electricity supply necessary, longer service life: doubled compared to conventional model, lower operating noise level: 13 dB (A), improved operational reliability from inbuilt mesh filter on (IN connection) compressed air inlet, reduced condensation levels: air exhaust channels integrated directly into the cylinder tube, suitable for: compressed air, size 1/4, with pressure gauge and silencer, elbow, pneumatic connection: G 1/4, pneumatic connection pressure gauge: G 1/8, pneumatic connections pressure gauge: 2, flow rate 230 l/min, pressure boost 1:2, manually actuated pressure adjustment mechanism, test pressure: 3 MPa, max. operating pressure: 2 MPa, min. operating pressure: 0.2 MPa, media temperature: +2 to +50 °C, ambient temperature: +2 to +50 °C

Ürün

Tanım	Bağlantı pnömatik	Model ebadı	Basınç ayarlama mekanizması	Basınç takviye oranı	Akış (L/min)	maks. işletme basıncı (MPa)
K- 07 60 00 11	G 3/8	3/8	manually operated	1:2	1000	1,50

Titiz kontrole rağmen hatalar önlenemez ve sorumluluk altında bırakmayan bilgiler hakkında hiçbir sorumluluk kabul edilmez.