# XRT
## 变径螺栓连接,T形

HANSA-FLEX

### 属性

| | |
|---|---|
| **接口 1 - 3** | 米制外螺纹,圆柱形 |
| **密封形式 1 - 3** | 24°内锥 |
| **结构类型** | 变径螺栓连接 |
| **结构形式** | T形 |
| **标准** | ISO 8434-1 |
| **供货范围** | 接套(不带锁紧螺母和切割环) |
| **原料** | 钢 |
| **表面保护** | 电镀涂层 |



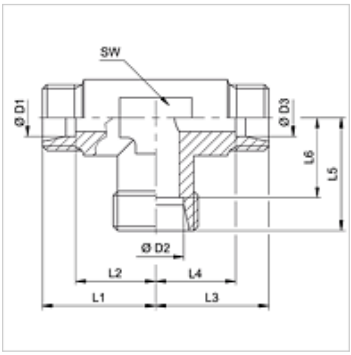


### 提示

有关安装、装入、压力负荷和允许的工作温度的说明请您参阅管螺栓连接的技术信息。

### 货品

| 名称 | 结构系列 | 工作压力 巴 | D1 (mm) | D2 (mm) | D3 (mm) | L1 (mm) | L2 (mm) | L3 (mm) | L4 (mm) | L5 (mm) | L6 (mm) | SW (mm) |
|---|---|---|---|---|---|---|---|---|---|---|---|---|
| **XRT 04 08 04 LL** | LL | PN 100 | 4 | 8 | 4 | 17,0 | 13,0 | 17,0 | 13,0 | 17,0 | 11,5 | 12 |
| **XRT 06 04 06 LL** | LL | PN 100 | 6 | 4 | 6 | 15,0 | 9,5 | 15,0 | 9,5 | 15,0 | 11,0 | 11 |
| | | | | | | | | | | | | |
| **XRT NW 04 06 04 HL** | L | PN 315 | 6 | 8 | 6 | 21,0 | 14,0 | 21,0 | 14,0 | 21,0 | 14,0 | 12 |
| **XRT NW 04 08 04 HL** | L | PN 315 | 6 | 10 | 6 | 22,0 | 15,0 | 22,0 | 15,0 | 22,0 | 15,0 | 14 |
| **XRT NW 06 04 06 HL** | L | PN 315 | 8 | 6 | 8 | 29,0 | 14,0 | 21,0 | 14,0 | 21,0 | 21,0 | 12 |
| **XRT NW 06 06 04 HL** | L | PN 315 | 8 | 8 | 6 | 21,0 | 14,0 | 21,0 | 14,0 | 21,0 | 14,0 | 14 |
| **XRT NW 06 08 06 HL** | L | PN 315 | 8 | 10 | 8 | 22,0 | 15,0 | 22,0 | 15,0 | 22,0 | 15,0 | 14 |
| **XRT NW 06 10 06 HL** | L | PN 315 | 8 | 12 | 8 | 24,0 | 17,0 | 24,0 | 17,0 | 24,0 | 17,0 | 17 |
| **XRT NW 06 13 06 HL** | L | PN 315 | 8 | 15 | 8 | 21,0 | 14,0 | 21,0 | 14,0 | 21,0 | 14,0 | 19 |
| **XRT NW 08 04 08 HL** | L | PN 315 | 10 | 6 | 10 | 22,0 | 15,0 | 22,0 | 15,0 | 22,0 | 15,0 | 14 |
| **XRT NW 08 06 06 HL** | L | PN 315 | 10 | 8 | 8 | 22,0 | 15,0 | 22,0 | 15,0 | 22,0 | 15,0 | 17 |
| **XRT NW 08 06 08 HL** | L | PN 315 | 10 | 8 | 10 | 22,0 | 15,0 | 22,0 | 15,0 | 22,0 | 15,0 | 14 |
| **XRT NW 08 08 04 HL** | L | PN 315 | 10 | 10 | 6 | 22,0 | 15,0 | 22,0 | 15,0 | 22,0 | 15,0 | 14 |
| **XRT NW 08 10 08 HL** | L | PN 315 | 10 | 12 | 10 | 24,0 | 17,0 | 24,0 | 17,0 | 24,0 | 17,0 | 19 |
| **XRT NW 08 13 08 HL** | L | PN 315 | 10 | 15 | 10 | 28,0 | 21,0 | 28,0 | 21,0 | 28,0 | 21,0 | 19 |
| **XRT NW 10 04 10 HL** | L | PN 315 | 12 | 6 | 12 | 24,0 | 17,0 | 24,0 | 17,0 | 24,0 | 17,0 | 17 |
| **XRT NW 10 06 06 HL** | L | PN 315 | 12 | 8 | 8 | 24,0 | 17,0 | 24,0 | 17,0 | 24,0 | 17,0 | 17 |
| **XRT NW 10 06 10 HL** | L | PN 315 | 12 | 8 | 12 | 24,0 | 17,0 | 24,0 | 17,0 | 24,0 | 17,0 | 17 |
| **XRT NW 10 08 08 HL** | L | PN 315 | 12 | 10 | 10 | 24,0 | 17,0 | 24,0 | 17,0 | 24,0 | 17,0 | 17 |
| **XRT NW 10 08 10 HL** | L | PN 315 | 12 | 10 | 12 | 24,0 | 17,0 | 24,0 | 17,0 | 24,0 | 17,0 | 17 |
| **XRT NW 10 10 06 HL** | L | PN 315 | 12 | 12 | 8 | 24,0 | 17,0 | 24,0 | 17,0 | 24,0 | 17,0 | 19 |
| **XRT NW 10 10 08 HL** | L | PN 315 | 12 | 12 | 10 | 24,0 | 17,0 | 24,0 | 17,0 | 24,0 | 17,0 | 17 |
| **XRT NW 10 13 10 HL** | L | PN 315 | 12 | 15 | 12 | 28,0 | 21,0 | 28,0 | 21,0 | 28,0 | 21,0 | 19 |
| **XRT NW 10 16 10 HL** | L | PN 315 | 12 | 18 | 12 | 31,0 | 24,0 | 31,0 | 24,0 | 31,0 | 23,5 | 24 |
| **XRT NW 10 20 10 HL** | L | PN 160 | 12 | 22 | 12 | 35,0 | 28,0 | 35,0 | 28,0 | 35,0 | 27,5 | 27 |
| **XRT NW 13 04 13 HL** | L | PN 315 | 15 | 6 | 15 | 28,0 | 21,0 | 28,0 | 21,0 | 28,0 | 21,0 | 19 |
| **XRT NW 13 06 06 HL** | L | PN 315 | 15 | 8 | 8 | 28,0 | 21,0 | 28,0 | 21,0 | 28,0 | 21,0 | 19 |
| **XRT NW 13 06 13 HL** | L | PN 315 | 15 | 8 | 15 | 28,0 | 21,0 | 28,0 | 21,0 | 28,0 | 21,0 | 19 |
| **XRT NW 13 08 06 HL** | L | PN 315 | 15 | 10 | 8 | 28,0 | 21,0 | 28,0 | 21,0 | 28,0 | 21,0 | 19 |
| **XRT NW 13 08 08 HL** | L | PN 315 | 15 | 10 | 10 | 28,0 | 21,0 | 28,0 | 21,0 | 28,0 | 21,0 | 19 |
| **XRT NW 13 08 13 HL** | L | PN 315 | 15 | 10 | 15 | 28,0 | 21,0 | 28,0 | 21,0 | 28,0 | 21,0 | 19 |
| **XRT NW 13 10 10 HL** | L | PN 315 | 15 | 12 | 12 | 28,0 | 21,0 | 28,0 | 21,0 | 28,0 | 21,0 | 19 |
| **XRT NW 13 10 13 HL** | L | PN 315 | 15 | 12 | 15 | 28,0 | 21,0 | 28,0 | 21,0 | 28,0 | 21,0 | 19 |
| **XRT NW 13 13 08 HL** | L | PN 315 | 15 | 15 | 10 | 28,0 | 21,0 | 28,0 | 21,0 | 28,0 | 21,0 | 19 |
| **XRT NW 13 13 10 HL** | L | PN 315 | 15 | 15 | 12 | 28,0 | 21,0 | 28,0 | 21,0 | 28,0 | 21,0 | 19 |
| **XRT NW 13 16 13 HL** | L | PN 315 | 15 | 18 | 15 | 31,0 | 24,0 | 31,0 | 24,0 | 31,0 | 23,5 | 24 |
| **XRT NW 13 20 10 HL** | L | PN 160 | 15 | 22 | 12 | 35,0 | 28,0 | 35,0 | 28,0 | 35,0 | 27,5 | 27 |
| **XRT NW 16 06 06 HL** | L | PN 315 | 18 | 8 | 8 | 31,5 | 24,0 | 31,0 | 24,0 | 30,5 | 23,5 | 24 |
| **XRT NW 16 06 16 HL** | L | PN 315 | 18 | 8 | 18 | 31,0 | 23,5 | 31,0 | 23,5 | 31,0 | 24,0 | 24 |
| **XRT NW 16 08 08 HL** | L | PN 315 | 18 | 10 | 10 | 31,0 | 23,5 | 31,0 | 24,0 | 31,0 | 24,0 | 24 |
| **XRT NW 16 08 16 HL** | L | PN 315 | 18 | 10 | 18 | 31,0 | 23,5 | 31,0 | 23,5 | 31,0 | 24,0 | 24 |
| **XRT NW 16 10 10 HL** | L | PN 315 | 18 | 12 | 12 | 31,0 | 23,5 | 31,0 | 24,0 | 31,0 | 24,0 | 24 |
| **XRT NW 16 10 16 HL** | L | PN 315 | 18 | 12 | 18 | 31,0 | 23,5 | 31,0 | 23,5 | 31,0 | 24,0 | 24 |
| **XRT NW 16 13 16 HL** | L | PN 315 | 18 | 15 | 18 | 31,0 | 23,5 | 31,0 | 23,5 | 31,0 | 24,0 | 24 |
| **XRT NW 16 16 06 HL** | L | PN 315 | 18 | 18 | 8 | 31,0 | 23,5 | 30,5 | 23,5 | 31,0 | 23,5 | 24 |

*尽管经过了仔细审阅,但我们无法完全排除发生错误的可能,对所提供的信息数据本公司不承担任何责任。*

# XRT
## 变径螺栓连接,T形

HANSA-FLEX

### 货品

| 名称 | 结构系列 | 工作压力 巴 | D1 (mm) | D2 (mm) | D3 (mm) | L1 (mm) | L2 (mm) | L3 (mm) | L4 (mm) | L5 (mm) | L6 (mm) | SW (mm) |
|---|---|---|---|---|---|---|---|---|---|---|---|---|
| **XRT NW 16 16 08 HL** | L | PN 315 | 18 | 18 | 10 | 31,0 | 23,5 | 31,0 | 24,0 | 31,0 | 23,5 | 24 |
| **XRT NW 16 16 10 HL** | L | PN 315 | 18 | 18 | 12 | 31,0 | 23,5 | 30,5 | 23,5 | 31,5 | 24,0 | 24 |
| **XRT NW 20 08 20 HL** | L | PN 160 | 22 | 10 | 22 | 35,0 | 27,5 | 35,0 | 27,5 | 35,0 | 28,0 | 27 |
| **XRT NW 20 10 20 HL** | L | PN 160 | 22 | 12 | 22 | 35,0 | 27,5 | 35,0 | 27,5 | 35,0 | 28,0 | 27 |
| **XRT NW 20 13 13 HL** | L | PN 160 | 22 | 15 | 15 | 35,0 | 27,5 | 35,0 | 28,0 | 35,0 | 28,0 | 27 |
| **XRT NW 20 13 20 HL** | L | PN 160 | 22 | 15 | 22 | 35,0 | 27,5 | 35,0 | 27,5 | 35,0 | 28,0 | 27 |
| **XRT NW 20 16 16 HL** | L | PN 160 | 22 | 18 | 18 | 35,0 | 27,5 | 35,0 | 27,5 | 35,0 | 27,5 | 27 |
| **XRT NW 20 16 20 HL** | L | PN 160 | 22 | 18 | 22 | 35,0 | 27,5 | 35,0 | 27,5 | 35,0 | 27,5 | 27 |
| **XRT NW 20 20 16 HL** | L | PN 160 | 22 | 22 | 18 | 35,0 | 27,5 | 35,0 | 27,5 | 35,0 | 27,5 | 27 |
| **XRT NW 20 25 20 HL** | L | PN 160 | 22 | 28 | 22 | 38,0 | 30,5 | 38,0 | 30,5 | 38,0 | 30,5 | 36 |
| **XRT NW 25 08 25 HL** | L | PN 160 | 28 | 10 | 28 | 38,0 | 30,5 | 38,0 | 30,5 | 38,0 | 31,0 | 36 |
| **XRT NW 25 10 25 HL** | L | PN 160 | 28 | 12 | 28 | 38,0 | 30,5 | 38,0 | 30,5 | 38,0 | 31,0 | 36 |
| **XRT NW 25 13 25 HL** | L | PN 160 | 28 | 15 | 28 | 38,0 | 30,5 | 38,0 | 30,5 | 38,0 | 31,0 | 36 |
| **XRT NW 25 16 25 HL** | L | PN 160 | 28 | 18 | 28 | 38,0 | 30,5 | 38,0 | 30,5 | 38,0 | 30,5 | 36 |
| **XRT NW 25 20 20 HL** | L | PN 160 | 28 | 22 | 22 | 38,0 | 30,5 | 38,0 | 30,5 | 38,0 | 30,5 | 36 |
| **XRT NW 25 20 25 HL** | L | PN 160 | 28 | 22 | 28 | 38,0 | 30,5 | 38,0 | 30,5 | 38,0 | 30,5 | 36 |
| **XRT NW 25 25 20 HL** | L | PN 160 | 28 | 28 | 22 | 38,0 | 30,5 | 38,0 | 30,5 | 38,0 | 30,5 | 36 |
| **XRT NW 32 20 32 HL** | L | PN 160 | 35 | 22 | 35 | 45,0 | 34,5 | 45,0 | 34,5 | 45,0 | 37,5 | 41 |
| **XRT NW 32 25 25 HL** | L | PN 160 | 35 | 28 | 28 | 45,0 | 34,5 | 45,0 | 37,5 | 45,0 | 37,5 | 41 |
| **XRT NW 32 25 32 HL** | L | PN 160 | 35 | 28 | 35 | 45,0 | 34,5 | 45,0 | 34,5 | 45,0 | 37,5 | 41 |
| | | | | | | | | | | | | |
| **XRT NW 16 HL 16 HS** | L / S | PN 315 | 20 | 18 | 20 | 37,0 | 26,5 | 37,0 | 26,5 | 37,0 | 29,5 | 27 |
| | | | | | | | | | | | | |
| **XRT NW 04 03 04 HS** | S | PN 630 | 8 | 6 | 8 | 20,0 | 13,0 | 19,0 | 12,0 | 20,0 | 13,0 | 12 |
| **XRT NW 06 03 06 HS** | S | PN 630 | 10 | 6 | 10 | 25,0 | 17,5 | 25,0 | 17,5 | 25,0 | 18,0 | 17 |
| **XRT NW 08 03 08 HS** | S | PN 630 | 12 | 6 | 12 | 24,5 | 17,0 | 24,5 | 17,0 | 24,0 | 17,0 | 17 |
| **XRT NW 08 04 04 HS** | S | PN 630 | 12 | 8 | 8 | 29,0 | 21,5 | 29,0 | 22,0 | 29,0 | 22,0 | 17 |
| **XRT NW 08 04 08 HS** | S | PN 630 | 12 | 8 | 12 | 29,0 | 21,5 | 29,0 | 21,5 | 29,0 | 22,0 | 17 |
| **XRT NW 08 06 08 HS** | S | PN 630 | 12 | 10 | 12 | 29,0 | 21,5 | 29,0 | 21,5 | 29,0 | 21,5 | 17 |
| **XRT NW 08 13 08 HS** | S | PN 630 | 12 | 16 | 12 | 33,0 | 25,5 | 33,0 | 25,5 | 33,0 | 24,5 | 24 |
| **XRT NW 10 06 10 HS** | S | PN 630 | 14 | 10 | 14 | 30,0 | 22,0 | 30,0 | 22,0 | 30,0 | 22,5 | 19 |
| **XRT NW 13 03 13 HS** | S | PN 400 | 16 | 6 | 16 | 33,0 | 24,5 | 33,0 | 24,5 | 33,0 | 26,0 | 24 |
| **XRT NW 13 04 13 HS** | S | PN 400 | 16 | 8 | 16 | 33,0 | 24,5 | 33,0 | 24,5 | 33,0 | 26,0 | 24 |
| **XRT NW 13 06 13 HS** | S | PN 400 | 16 | 10 | 16 | 33,0 | 24,5 | 33,0 | 24,5 | 33,0 | 25,5 | 24 |
| **XRT NW 13 08 13 HS** | S | PN 400 | 16 | 12 | 16 | 33,0 | 24,5 | 33,0 | 24,5 | 33,0 | 25,5 | 24 |
| **XRT NW 13 16 13 HS** | S | PN 400 | 16 | 20 | 16 | 37,0 | 28,5 | 37,0 | 28,5 | 37,0 | 26,5 | 27 |
| **XRT NW 16 06 16 HS** | S | PN 400 | 20 | 10 | 20 | 37,0 | 26,5 | 37,0 | 26,5 | 37,0 | 29,5 | 27 |
| **XRT NW 16 08 16 HS** | S | PN 400 | 20 | 12 | 20 | 37,0 | 26,5 | 37,0 | 26,5 | 37,0 | 29,5 | 27 |
| **XRT NW 16 10 16 HS** | S | PN 400 | 20 | 14 | 20 | 37,0 | 26,5 | 37,0 | 26,5 | 37,5 | 29,5 | 27 |
| **XRT NW 16 13 16 HS** | S | PN 400 | 20 | 16 | 20 | 37,0 | 26,5 | 37,0 | 26,5 | 37,0 | 28,5 | 27 |
| **XRT NW 16 16 20 HS** | S | PN 400 | 20 | 20 | 25 | 39,0 | 28,5 | 40,5 | 28,5 | 37,0 | 28,5 | 36 |
| **XRT NW 16 20 16 HS** | S | PN 400 | 20 | 25 | 20 | 42,0 | 31,5 | 42,0 | 31,5 | 42,0 | 30,0 | 36 |
| **XRT NW 20 13 20 HS** | S | PN 400 | 25 | 16 | 25 | 42,0 | 30,0 | 42,0 | 30,0 | 42,0 | 33,5 | 36 |
| **XRT NW 20 16 20 HS** | S | PN 400 | 25 | 20 | 25 | 42,0 | 30,0 | 42,0 | 30,0 | 42,0 | 31,5 | 36 |
| **XRT NW 20 25 20 HS** | S | PN 400 | 25 | 30 | 25 | 49,0 | 37,0 | 49,0 | 37,0 | 49,0 | 35,5 | 41 |
| **XRT NW 25 13 25 HS** | S | PN 400 | 30 | 16 | 30 | 49,0 | 35,5 | 49,0 | 35,5 | 49,0 | 40,5 | 41 |
| **XRT NW 25 16 25 HS** | S | PN 400 | 30 | 20 | 30 | 49,0 | 35,5 | 49,0 | 35,5 | 49,0 | 38,5 | 41 |
| **XRT NW 25 20 25 HS** | S | PN 400 | 30 | 25 | 30 | 49,0 | 35,5 | 49,0 | 35,5 | 49,0 | 37,0 | 41 |

结构系列:LL=非常轻 L=轻 S=重 – PN = 额定压力 PB = 最大工作压力 – D1, D2, D3 = 管外直径 – TGL = M 27 x 2

### 产品变体

| | |
|---|---|
| **XRT VA** | 变径螺栓连接,T形, 不锈钢 |
| **RT** | 变径螺栓连接,T形, 钢 |

*尽管经过了仔细审阅,但我们无法完全排除发生错误的可能,对所提供的信息数据本公司不承担任何责任。*