XVR ED
旋入式螺栓连接

HANSA-FLEX

属性

接口 1	BSP外螺纹,圆柱形
密封形式 1	E型
接口 2	米制外螺纹,圆柱形
密封形式 2	24°内锥
结构类型	旋入式螺栓连接
结构形式	直道
标准	DIN 2353 ISO 8434-1
供货范围	接套(不带锁紧螺母和切割环)
原料	钢
表面保护	电镀涂层



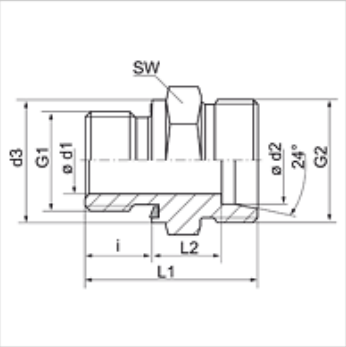

提示

有关安装、装入、压力负荷和允许的工作温度的说明请您参阅管螺栓连接的技术信息。

货品

名称	结构系列	工作压力 巴	Ø d1 (mm)	Ø d2 (mm)	G1	G2	Ø d3 (mm)	i (mm)	L1 (mm)	L2 (mm)	SW (mm)
XVR 04 LL ED	LL	PN 100	-	4	G 1/8" -28	M 8 x 1	14	8	20,0	9,5	14
XVR 06 LL ED	LL	PN 100	-	6	G 1/8" -28	M 10 x 1	14	8	20,0	8,0	14
XVR NW 04 HL ED	L	PN 315	-	6	G 1/8" -28	M 12 x 1.5	14	8	23,5	8,5	14
XVR NW 04 HL 1/4 ED	L	PN 315	-	6	G 1/4" -19	M 12 x 1.5	20	12	29,0	10,0	19
XVR NW 04 HL 1/2 ED	L	PN 315	-	6	G 1/2" -14	M 12 x 1.5	27	14	33,0	12,0	27
XVR NW 04 HL 3/8 ED	L	PN 315	-	6	G 3/8" -19	M 12 x 1.5	22	12	29,5	10,5	22
XVR NW 06 HL 1/8 ED	L	PN 315	-	8	G 1/8" -28	M 14 x 1.5	14	8	24,5	9,5	14
XVR NW 06 HL ED	L	PN 315	-	8	G 1/4" -19	M 14 x 1.5	19	12	29,0	10,0	19
XVR NW 06 HL 3/8 ED	L	PN 315	-	8	G 3/8" -19	M 14 x 1.5	22	12	30,5	11,5	22
XVR NW 06 HL 1/2 ED	L	PN 315	-	8	G 1/2" -14	M 14 x 1.5	27	14	33,0	12,0	27
XVR NW 08 HL 1/8 ED	L	PN 315	-	10	G 1/8" -28	M 16 x 1.5	14	8	25,5	10,5	19
XVR NW 08 HL ED	L	PN 315	-	10	G 1/4" -19	M 16 x 1.5	19	12	30,0	11,0	19
XVR NW 08 HL 3/8 ED	L	PN 315	-	10	G 3/8" -19	M 16 x 1.5	22	12	31,5	12,5	22
XVR NW 08 HL 1/2 ED	L	PN 315	-	10	G 1/2" -14	M 16 x 1.5	27	14	34,0	13,0	27
XVR NW 10 HL 1/4 ED	L	PN 315	-	12	G 1/4" -19	M 18 x 1.5	19	12	31,5	12,5	22
XVR NW 10 HL ED	L	PN 315	-	12	G 3/8" -19	M 18 x 1.5	22	12	31,5	12,5	22
XVR NW 10 HL 1/2 ED	L	PN 315	-	12	G 1/2" -14	M 18 x 1.5	27	14	34,0	13,0	27
XVR NW 10 HL 3/4 ED	L	PN 250	-	12	G 3/4" -14	M 18 x 1.5	32	16	36,0	13,0	32
XVR NW 13 HL 3/8 ED	L	PN 315	-	15	G 3/8" -19	M 22 x 1.5	22	12	33,0	14,0	27
XVR NW 13 HL ED	L	PN 315	-	15	G 1/2" -14	M 22 x 1.5	27	14	35,0	14,0	27
XVR NW 13 HL 3/4 ED	L	PN 250	-	15	G 3/4" -14	M 22 x 1.5	32	16	38,0	15,0	32
XVR NW 16 HL 3/8 ED	L	PN 315	-	18	G 3/8" -19	M 26 x 1.5	22	12	33,5	14,0	27
XVR NW 16 HL ED	L	PN 315	-	18	G 1/2" -14	M 26 x 1.5	27	14	36,0	14,5	27
XVR NW 16 HL 3/4 ED	L	PN 250	-	18	G 3/4" -14	M 26 x 1.5	32	16	38,0	14,5	32
XVR NW 20 HL 1/2 ED	L	PN 160	-	22	G 1/2" -14	M 30 x 2	27	14	38,0	16,5	32
XVR NW 20 HL ED	L	PN 160	-	22	G 3/4" -14	M 30 x 2	32	16	40,0	16,5	32
XVR NW 20 HL 1 ED	L	PN 160	-	22	G 1" -11	M 30 x 2	40	18	42,0	16,5	41
XVR NW 25 HL 3/4 ED	L	PN 160	-	28	G 3/4" -14	M 36 x 2	32	16	41,0	17,5	41
XVR NW 25 HL ED	L	PN 160	-	28	G 1" -11	M 36 x 2	40	18	43,0	17,5	41
XVR NW 25 HL 1 1/4 ED	L	PN 160	-	28	G 1.1/4" -11	M 36 x 2	50	20	46,0	18,5	50
XVR NW 32 HL 1 ED	L	PN 160	-	35	G 1" -11	M 45 x 2	40	18	46,0	17,5	50
XVR NW 32 HL ED	L	PN 160	-	35	G 1.1/4" -11	M 45 x 2	50	20	48,0	17,5	50
XVR NW 32 HL 11/2 ED	L	PN 160	30	35	G 1.1/2"	M 45 x 2	55	22	52,0	19,5	55
XVR NW 40 HL 1 1/4 ED	L	PN 160	-	42	G 1.1/4" -11	M 52 x 2	50	20	50,0	19,0	55
XVR NW 40 HL ED	L	PN 160	-	42	G 1.1/2" -11	M 52 x 2	55	22	52,0	19,0	55
XVR NW 03 HS ED	S	PN 630	-	6	G 1/4" -19	M 14 x 1.5	19	12	32,0	13,0	19
XVR NW 03 HS 1/2 ED	S	PN 630	-	6	G 1/2" -14	M 14 x 1.5	27	14	39,0	18,0	27
XVR NW 04 HS ED	S	PN 630	-	8	G 1/4" -19	M 16 x 1.5	19	12	34,0	15,0	19
XVR NW 04 HS 3/8 ED	S	PN 630	-	8	G 3/8" -19	M 16 x 1.5	22	12	34,5	15,5	22
XVR NW 06 HS 1/4 ED	S	PN 630	-	10	G 1/4" -19	M 18 x 1.5	19	12	34,0	14,5	22
XVR NW 06 HS ED	S	PN 630	-	10	G 3/8" -19	M 18 x 1.5	22	12	34,5	15,0	22

尽管经过了仔细审阅,但我们无法完全排除发生错误的可能,对所提供的信息数据本公司不承担任何责任。

XVR ED
旋入式螺栓连接

HANSA-FLEX

货品

名称	结构系列	工作压力 巴	Ø d1 (mm)	Ø d2 (mm)	G1	G2	Ø d3 (mm)	i (mm)	L1 (mm)	L2 (mm)	SW (mm)
XVR NW 06 HS 1/2 ED	S	PN 630	-	10	G 1/2" -14	M 18 x 1.5	27	14	39,0	17,5	27
XVR NW 08 HS 1/4 ED	S	PN 630	-	12	G 1/4" -19	M 20 x 1.5	19	12	36,0	16,5	22
XVR NW 08 HS ED	S	PN 630	-	12	G 3/8" -19	M 20 x 1.5	22	12	36,5	17,0	22
XVR NW 08 HS 1/2 ED	S	PN 630	-	12	G 1/2" -14	M 20 x 1.5	27	14	39,0	17,5	27
XVR NW 10 HS 3/8 ED	S	PN 630	-	14	G 3/8" -19	M 22 x 1.5	22	12	38,5	18,5	27
XVR NW 10 HS ED	S	PN 630	-	14	G 1/2" -14	M 22 x 1.5	27	14	41,0	19,0	27
XVR NW 10 HS 3/4 ED	S	PN 630	-	14	G 3/4" -14	M 22 x 1.5	32	16	45,0	21,0	32
XVR NW 13 HS 3/8 ED	S	PN 400	-	16	G 3/8" -19	M 24 x 1.5	22	12	38,5	18,0	27
XVR NW 13 HS ED	S	PN 400	-	16	G 1/2" -14	M 24 x 1.5	27	14	41,0	18,5	27
XVR NW 13 HS 3/4 ED	S	PN 400	-	16	G 3/4" -14	M 24 x 1.5	32	16	45,0	20,5	32
XVR NW 13 HS 1 ED	S	PN 400	-	16	G 1"	M 24 x 1.5	39	18	45,5	18,8	41
XVR NW 16 HS 1/2 ED	S	PN 400	-	20	G 1/2" -14	M 30 x 2	27	14	45,0	20,5	32
XVR NW 16 HS ED	S	PN 400	-	20	G 3/4" -14	M 30 x 2	32	16	47,0	20,5	32
XVR NW 16 HS 1 ED	S	PN 400	-	20	G 1" -11	M 30 x 2	40	18	51,0	22,5	41
XVR NW 20 HS 1/2 ED	S	PN 400	-	25	G 1/2" -14	M 36 x 2	27	14	49,0	23,0	41
XVR NW 20 HS 3/4 ED	S	PN 400	-	25	G 3/4" -14	M 36 x 2	32	16	51,0	23,0	41
XVR NW 20 HS ED	S	PN 400	-	25	G 1" -11	M 36 x 2	40	18	53,0	23,0	41
XVR NW 25 HS 1 ED	S	PN 400	-	30	G 1" -11	M 42 x 2	40	18	55,0	23,5	50
XVR NW 25 HS ED	S	PN 400	-	30	G 1.1/4" -11	M 42 x 2	50	20	57,0	23,5	50
XVR NW 32 HS 1 1/4 ED	S	PN 315	-	38	G 1.1/4" -11	M 52 x 2	50	20	62,0	26,0	55
XVR NW 32 HS ED	S	PN 315	-	38	G 1.1/2" -11	M 52 x 2	55	22	64,0	26,0	55

结构系列:LL=非常轻 L=轻 S=重 – PN = 额定压力 PB = 最大工作压力 – Ø d2 = 管外直径

产品变体

XVR ED VA	旋入式螺栓连接, 不锈钢
VR ED	旋入式螺栓连接, 钢

备件

WD	用于ED螺栓连接的软密封

尽管经过了仔细审阅,但我们无法完全排除发生错误的可能,对所提供的信息数据本公司不承担任何责任。