W90 HB HN
旋入式接套,角度90°

HANSA-FLEX

属性

接口 1	BSP外螺纹,圆柱形
密封形式 1	60°内锥
接口 2	NPT外螺纹
密封形式 2	螺纹密封
结构类型	旋入式接套
结构形式	角度90°
原料	钢
表面保护	电镀涂层



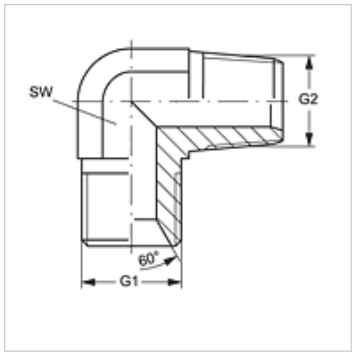

货品

名称	G1	G2	SW (mm)
W90 HB 02 HN	G 1/8" -28	1/8" -27 NPT	11
W90 HB 04 HN 02	G 1/4" -19	1/8" -27 NPT	14
W90 HB 04 HN	G 1/4" -19	1/4" -18 NPT	14
W90 HB 06 HN 04	G 3/8" -19	1/4" -18 NPT	19
W90 HB 06 HN	G 3/8" -19	3/8" -18 NPT	19
W90 HB 06 HN 08	G 3/8" -19	1/2" -14 NPT	22
W90 HB 08 HN 06	G 1/2" -14	3/8" -18 NPT	22
W90 HB 08 HN	G 1/2" -14	1/2" -14 NPT	22
W90 HB 12 HN 08	G 3/4" -14	1/2" -14 NPT	27
W90 HB 12 HN	G 3/4" -14	3/4" -14 NPT	27
W90 HB 16 HN	G 1" -11	1" -11.5 NPT	33
W90 HB 20 HN	G 1.1/4" -11	1.1/4" -11.5 NPT	41
W90 HB 24 HN	G 1.1/2" -11	1.1/2" -11.5 NPT	50
W90 HB 32 HN	G 2" -11	2" -11.5 NPT	55

SW = 对应边宽度

尽管经过了仔细审阅,但我们无法完全排除发生错误的可能,对所提供的信息数据本公司不承担任何责任。