G AB HB
连接器

HANSA-FLEX

属性

接口 1	BSP螺母螺纹
密封形式 1	60°外锥
接口 2	BSP外螺纹,圆柱形
密封形式 2	60°内锥
结构类型	连接器
结构形式	直道
原料	钢
表面保护	电镀涂层



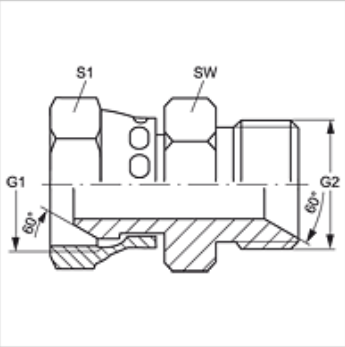

货品

名称	G1	G2	SW (mm)	S1
G AB 02 HB	G 1/8" -28	G 1/8" -28	14	14
G AB 02 HB 04	G 1/8" -28	G 1/4" -19	19	14
G AB 04 HB 02	G 1/4" -19	G 1/8" -28	14	19
G AB 04 HB	G 1/4" -19	G 1/4" -19	19	19
G AB 04 HB 06	G 1/4" -19	G 3/8" -19	22	19
G AB 04 HB 08	G 1/4" -19	G 1/2" -14	27	19
G AB 06 HB 04	G 3/8" -19	G 1/4" -19	19	22
G AB 06 HB	G 3/8" -19	G 3/8" -19	22	22
G AB 06 HB 08	G 3/8" -19	G 1/2" -14	27	22
G AB 06 HB 12	G 3/8" -19	G 3/4" -14	32	22
G AB 08 HB 04	G 1/2" -14	G 1/4" -19	19	27
G AB 08 HB 06	G 1/2" -14	G 3/8" -19	22	27
G AB 08 HB	G 1/2" -14	G 1/2" -14	27	27
G AB 08 HB 10	G 1/2" -14	G 5/8" -14	30	27
G AB 08 HB 12	G 1/2" -14	G 3/4" -14	32	27
G AB 08 HB 16	G 1/2" -14	G 1" -11	41	27
G AB 10 HB 06	G 5/8" -14	G 3/8" -19	30	30
G AB 10 HB 08	G 5/8" -14	G 1/2" -14	27	30
G AB 10 HB	G 5/8" -14	G 5/8" -14	30	30
G AB 10 HB 12	G 5/8" -14	G 3/4" -14	32	30
G AB 10 HB 16	G 5/8" -14	G 1" -11	41	30
G AB 12 HB 06	G 3/4" -14	G 3/8" -19	27	32
G AB 12 HB 08	G 3/4" -14	G 1/2" -14	27	32
G AB 12 HB 10	G 3/4" -14	G 5/8" -14	30	32
G AB 12 HB	G 3/4" -14	G 3/4" -14	32	32
G AB 12 HB 16	G 3/4" -14	G 1" -11	41	32
G AB 12 HB 20	G 3/4" -14	G 1.1/4" -11	50	32
G AB 16 HB 08	G 1" -11	G 1/2" -14	32	41
G AB 16 HB 10	G 1" -11	G 5/8" -14	32	41
G AB 16 HB 12	G 1" -11	G 3/4" -14	32	41
G AB 16 HB	G 1" -11	G 1" -11	41	41
G AB 16 HB 20	G 1" -11	G 1.1/4" -11	50	41
G AB 20 HB 12	G 1.1/4" -11	G 3/4" -14	41	50
G AB 20 HB 16	G 1.1/4" -11	G 1" -11	41	50
G AB 20 HB	G 1.1/4" -11	G 1.1/4" -11	50	50
G AB 20 HB 24	G 1.1/4" -11	G 1.1/2" -11	55	50
G AB 24 HB 20	G 1.1/2" -11	G 1.1/4" -11	50	55
G AB 24 HB	G 1.1/2" -11	G 1.1/2" -11	55	55
G AB 24 HB 32	G 1.1/2" -11	G 2" -11	70	55
G AB 32 HB 24	G 2" -11	G 1.1/2" -11	60	70
G AB 32 HB	G 2" -11	G 2" -11	70	70

SW, S1, S2 = 对应边宽度

产品变体

G AB HB VA	连接器, 不锈钢

尽管经过了仔细审阅,但我们无法完全排除发生错误的可能,对所提供的信息数据本公司不承担任何责任。