GE O HB
旋入式接套

HANSA-FLEX

属性

接口 1	UN/UNF外螺纹
密封形式 1	旋入式接套上O形圈密封
接口 2	BSP外螺纹,圆柱形
密封形式 2	60°内锥
结构类型	旋入式接套
结构形式	直道
原料	钢
表面保护	电镀涂层



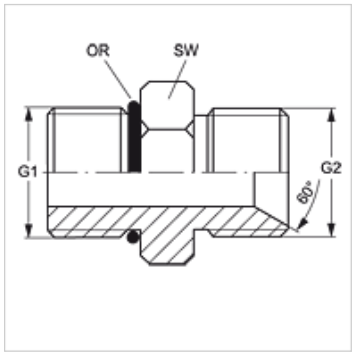

货品

名称	G1	G2	SW (mm)	OR
GE O 04 HB 02	7/16" -20 UNF	G 1/8" -28	17	8.92 x 1.83
GE O 04 HB	7/16" -20 UNF	G 1/4" -19	17	8.92 x 1.83
GE O 04 HB 06	7/16" -20 UNF	G 3/8" -19	21	8.92 x 1.83
GE O 05 HB 02	1/2" -20 UNF	G 1/8" -28	19	10.52 x 1.83
GE O 05 HB 04	1/2" -20 UNF	G 1/4" -19	19	10.52 x 1.83
GE O 05 HB 06	1/2" -20 UNF	G 3/8" -19	21	10.52 x 1.83
GE O 06 HB 04	9/16" -18 UNF	G 1/4" -19	21	11.90 x 1.98
GE O 06 HB	9/16" -18 UNF	G 3/8" -19	21	11.90 x 1.98
GE O 06 HB 08	9/16" -18 UNF	G 1/2" -14	28	11.90 x 1.98
GE O 08 HB 04	3/4" -16 UNF	G 1/4" -19	26	16.36 x 2.20
GE O 08 HB 06	3/4" -16 UNF	G 3/8" -19	26	16.36 x 2.20
GE O 08 HB	3/4" -16 UNF	G 1/2" -14	28	16.36 x 2.20
GE O 08 HB 10	3/4" -16 UNF	G 5/8" -14	30	16.36 x 2.20
GE O 08 HB 12	3/4" -16 UNF	G 3/4" -14	36	16.36 x 2.20
GE O 10 HB 06	7/8" -14 UNF(细牙系列)	G 3/8" -19	30	19.18 x 2.46
GE O 10 HB 08	7/8" -14 UNF(细牙系列)	G 1/2" -14	30	19.18 x 2.46
GE O 10 HB	7/8" -14 UNF(细牙系列)	G 5/8" -14	30	19.18 x 2.46
GE O 10 HB 12	7/8" -14 UNF(细牙系列)	G 3/4" -14	36	19.18 x 2.46
GE O 10 HB 16	7/8" -14 UNF(细牙系列)	G 1" -11	40	19.18 x 2.46
GE O 12 HB 08	1.1/16" -12 UN	G 1/2" -14	36	23.47 x 2.95
GE O 12 HB 10	1.1/16" -12 UN	G 5/8" -14	36	23.47 x 2.95
GE O 12 HB	1.1/16" -12 UN	G 3/4" -14	36	23.47 x 2.95
GE O 12 HB 16	1.1/16" -12 UN	G 1" -11	45	23.47 x 2.95
GE O 16 HB 12	1.5/16" -12 UN	G 3/4" -14	45	29.74 x 2.95
GE O 16 HB	1.5/16" -12 UN	G 1" -11	45	29.74 x 2.95
GE O 16 HB 20	1.5/16" -12 UN	G 1.1/4" -11	55	29.74 x 2.95
GE O 20 HB 16	1.5/8" -12 UN	G 1" -11	55	37.47 x 3.00
GE O 20 HB	1.5/8" -12 UN	G 1.1/4" -11	55	37.47 x 3.00
GE O 24 HB 20	1.7/8" -12 UN	G 1.1/4" -11	62	43.69 x 3.00
GE O 24 HB	1.7/8" -12 UN	G 1.1/2" -11	62	43.69 x 3.00

SW = 对应边宽度

尽管经过了仔细审阅,但我们无法完全排除发生错误的可能,对所提供的信息数据本公司不承担任何责任。