# T HROK HB
旋入式接套,T形

HANSA-FLEX

## 属性

| | |
|---|---|
| **接口 1** | BSP外螺纹,圆柱形 |
| **密封形式 1** | 螺纹接套带O形圈 + 腔环 |
| **接口 2 + 3** | BSP外螺纹,圆柱形 |
| **密封形式 2 + 3** | 60°内锥 |
| **结构类型** | 方向可调节的旋入式接套 |
| **结构形式** | T形 |
| **原料** | 钢 |
| **表面保护** | 电镀涂层 |



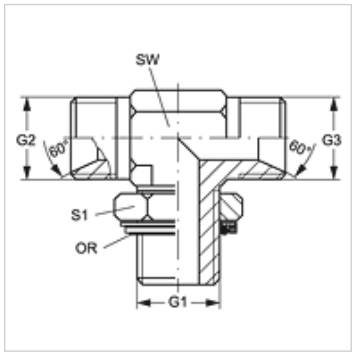


## 货品

| 名称 | G1 | G2 - G3 | SW (mm) | S1 | OR |
|---|---|---|---|---|---|
| **T HROK 02 HB** | G 1/8" -28 | G 1/8" -28 | 14 | 14 | 7.65 x 1.78 |
| **T HROK 04 HB 02** | G 1/4" -19 | G 1/8" -28 | 14 | 19 | 10.78 x 2.62 |
| **T HROK 04 HB** | G 1/4" -19 | G 1/4" -19 | 19 | 19 | 10.78 x 2.62 |
| **T HROK 04 HB 06** | G 1/4" -19 | G 3/8" -19 | 19 | 19 | 10.78 x 2.62 |
| **T HROK 06 HB 04** | G 3/8" -19 | G 1/4" -19 | 19 | 22 | 13.94 x 2.62 |
| **T HROK 06 HB** | G 3/8" -19 | G 3/8" -19 | 19 | 22 | 13.94 x 2.62 |
| **T HROK 06 HB 08** | G 3/8" -19 | G 1/2" -14 | 19 | 22 | 13.94 x 2.62 |
| **T HROK 08 HB 06** | G 1/2" -14 | G 3/8" -19 | 27 | 27 | 17.86 x 2.62 |
| **T HROK 08 HB** | G 1/2" -14 | G 1/2" -14 | 27 | 27 | 17.86 x 2.62 |
| **T HROK 08 HB 10** | G 1/2" -14 | G 5/8" -14 | 27 | 27 | 17.86 x 2.62 |
| **T HROK 08 HB 12** | G 1/2" -14 | G 3/4" -14 | 30 | 27 | 17.86 x 2.62 |
| **T HROK 12 HB 08** | G 3/4" -14 | G 1/2" -14 | 30 | 36 | 23.47 x 2.62 |
| **T HROK 12 HB** | G 3/4" -14 | G 3/4" -14 | 30 | 36 | 23.47 x 2.62 |
| **T HROK 12 HB 16** | G 3/4" -14 | G 1" -11 | 36 | 36 | 23.47 x 2.62 |
| **T HROK 16 HB 12** | G 1" -11 | G 3/4" -14 | 36 | 41 | 29.74 x 3.53 |
| **T HROK 16 HB** | G 1" -11 | G 1" -11 | 36 | 41 | 29.74 x 3.53 |
| **T HROK 20 HB 16** | G 1.1/4" -11 | G 1" -11 | 41 | 50 | 37.69 x 3.53 |
| **T HROK 20 HB** | G 1.1/4" -11 | G 1.1/4" -11 | 51 | 50 | 37.69 x 3.53 |
| **T HROK 24 HB** | G 1.1/2" -11 | G 1.1/2" -11 | 50 | 55 | 44.04 x 3.53 |

SW, S1, S2 = 对应边宽度

## 备件

| | |
|---|---|
| **KAMMRING G** | 腔环,英寸制 |

*尽管经过了仔细审阅,但我们无法完全排除发生错误的可能,对所提供的信息数据本公司不承担任何责任。*