K-SCHL-AUFROLLER LUFT H

Hose reels for compressed air, high flow capacity

属性

软管材料	Braided polyurethane
工作压力	最大12巴
工作温度	-20 °C to +60 °C
转动角度	300°



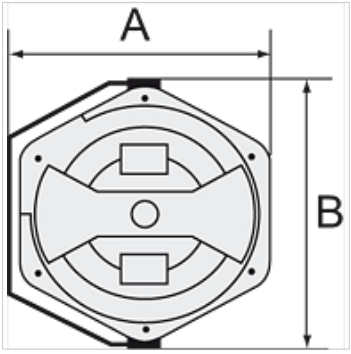

提示

其它数据应客户要求提供。

描述

Specially designed to ensure a high flow capacity. Easy mounting on the wall or ceiling. Closed, rugged, impact-resistant housing made of POM, supply/outlet R 1/4 male thread and lightweight, hard-wearing, oil-resistant polyurethane hose. Incl. 2 m feeder hose.

货品

名称	软管尺寸	A (mm)	B (mm)	软管长度 (m)
K- 07 10 06 14	16 mm x 11 mm	394,5	436,0	10

尽管经过了仔细审阅,但我们无法完全排除发生错误的可能,对所提供的信息数据本公司不承担任何责任。