K-BKR SERIE VALVE LINE

Stainless steel ball valves

HANSA-FLEX

属性

工作压力	max. 70 bar, depending on temperature and nominal size
工作温度	-15 °C to +110 °C, depending on port size and temperature
螺纹描述	G thread acc. DIN EN ISO 228-1
密封	PTFE
手柄	Stainless steel 1.4301
原料	sealing: PTFE



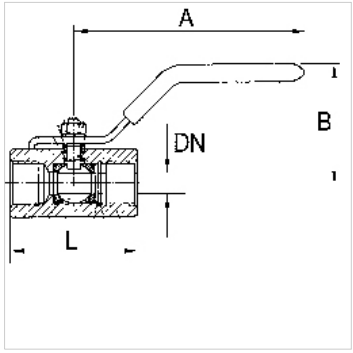

提示

其它数据应客户要求提供。

货品

名称	DN	螺纹	A (mm)	B (mm)	L (mm)	原料
K- 07 30 15 24	13	1/4	99,5	47,0	47,5	Stainless steel 1.4408
K- 07 30 15 25	13	3/8	99,5	47,0	47,5	Stainless steel 1.4408
K- 07 30 15 26	15	1/2	99,5	48,0	58,0	Stainless steel 1.4408
K- 07 30 15 27	20	3/4	126,5	62,0	65,0	Stainless steel 1.4408
K- 07 30 15 28	25	1	126,5	69,0	77,0	Stainless steel 1.4408
K- 07 30 15 29	32	1 1/4	153,0	81,0	90,0	Stainless steel 1.4408
K- 07 30 15 30	38	1 1/2	153,0	87,0	98,5	Stainless steel 1.4408
K- 07 30 15 31	50	2	192,0	95,0	122,0	Stainless steel 1.4408

尽管经过了仔细审阅,但我们无法完全排除发生错误的可能,对所提供的信息数据本公司不承担任何责任。