K-BKR EINTEILIG VA

Ball valves

HANSA-FLEX

属性	
工作压力	max. 55 bar (depending on connection size and temperature)
工作温度	Max. 150 °C
密封	PTFE
手柄	Stainless steel 1.4301

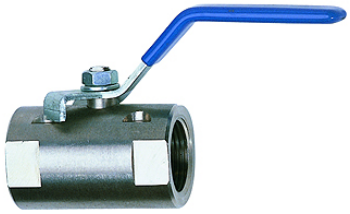

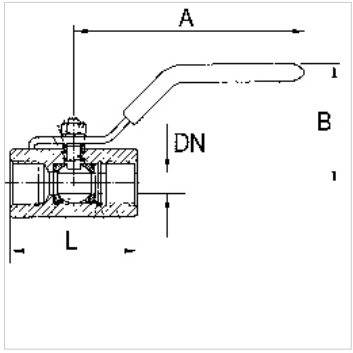

提示

G thread acc. to DIN EN ISO 228-1, with ISO flange plate (acc. to ISO 5211)
其它数据应客户要求提供。

描述

Full bore with G 1/4 to G 3/8, reduced bore with G 1/2 to G 2

订购指南

For use on devices that have to be vented whenever they are turned off, either because of safety regulations or for technical reasons. The pneumatic devices are disconnected from the system and simultaneously vented each time they are shut off.

货品

名称	DN	螺纹	A (mm)	B (mm)	L (mm)	原料
K- 07 30 14 94	5	G 1/4	60,0	30,0	39,8	Stainless steel 1.4401/1.4408
K- 07 30 14 95	7	G 3/8	80,0	33,0	44,8	Stainless steel 1.4401/1.4408
K- 07 30 14 96	9	G 1/2	110,0	57,0	56,5	Stainless steel 1.4401/1.4408
K- 07 30 14 97	13	G 3/4	110,0	61,0	60,0	Stainless steel 1.4401/1.4408
K- 07 30 14 98	15	G 1	124,0	70,0	70,0	Stainless steel 1.4401/1.4408
K- 07 30 14 99	20	G 1 1/4	152,0	75,0	77,6	Stainless steel 1.4401/1.4408
K- 07 30 15 00	25	G 1 1/2	150,0	80,0	87,0	Stainless steel 1.4401/1.4408
K- 07 30 15 01	32	G 2	155,0	85,0	102,0	Stainless steel 1.4401/1.4408

尽管经过了仔细审阅,但我们无法完全排除发生错误的可能,对所提供的信息数据本公司不承担任何责任。