# K-BKR LEICHT IG AG

Ball valves, lightweight type, female/male thread

## 属性

| | |
|---|---|
| **应用范围** | Compressed air, water, non-toxic and non-corrosive gases, heating systems, agriculture |
| **工作压力** | Max. 40 bar |
| **工作温度** | -15 °C to +90 °C |
| **螺纹描述** | G thread acc. DIN EN ISO 228-1 |
| **壳体** | Nickel-plated brass |
| **柄** | Alu, painted black |
| **球体** | Chrome-plated brass |
| **球密封** | PTFE |
| **主轴密封** | HNBR / EPDM / PTFE. 2 O-Rings (HNBR / EPDM) 1 gasket (PTFE)<br>additional PTFE-gasket |



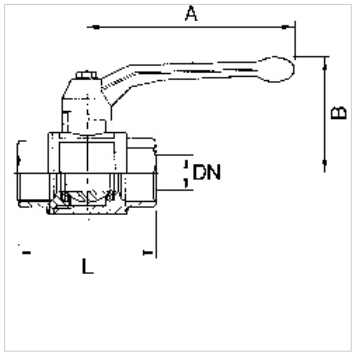


## 提示

其它数据应客户要求提供。

## 货品

| 名称 | DN | 螺纹 | A (mm) | B (mm) | L (mm) |
|---|---|---|---|---|---|
| **K- 07 30 00 25** | 8 | G 1/4 | 85,0 | 42,0 | 44,0 |
| **K- 07 30 00 26** | 10 | G 3/8 | 85,0 | 42,0 | 51,0 |
| **K- 07 30 00 27** | 15 | G 1/2 | 85,0 | 46,0 | 60,0 |
| **K- 07 30 00 28** | 20 | G 3/4 | 105,0 | 53,0 | 70,0 |
| **K- 07 30 00 29** | 25 | G 1 | 105,0 | 57,0 | 79,0 |
| **K- 07 30 00 30** | 32 | G 1 1/4 | 130,0 | 70,0 | 91,0 |
| **K- 07 30 00 31** | 40 | G 1 1/2 | 130,0 | 76,0 | 104,0 |
| **K- 07 30 00 32** | 50 | G 2 | 165,0 | 92,0 | 122,0 |

*尽管经过了仔细审阅,但我们无法完全排除发生错误的可能,对所提供的信息数据本公司不承担任何责任。*