K-ABBLV 2

Blow-off safety valves G 1/4

HANSA-FLEX

属性

工作压力	0.5 - 60 bar
工作温度	max. 180 °C
密封	FKM
壳体	Brass



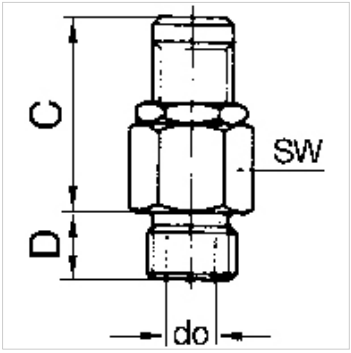

提示

G thread acc. to DIN EN ISO 228-1, with ISO flange plate (acc. to ISO 5211)
其它数据应客户要求提供。

描述

Manual adjustment of the blow-off pressure (lock nut).

订购指南

For use on devices that have to be vented whenever they are turned off, either because of safety regulations or for technical reasons. The pneumatic devices are disconnected from the system and simultaneously vented each time they are shut off.

附加信息

These blow-off valves can also be supplied with a fixed setting and a TÜV type test number. Please ask for an offer.

货品

名称	螺纹	起动压力	排气性能	C (mm)	D (mm)	do (mm)	SW (mm)
K- 07 30 29 18	G 1/4	0.5 - 1.0 bar	to 50 l/min	27,0	7,0	3,0	16
K- 07 30 21 95	G 1/4	1.0 - 4.0 bar	to 200 l/min	27,0	7,0	3,0	16
K- 07 30 21 96	G 1/4	3.0 - 7.0 bar	to 350 l/min	27,0	7,0	3,0	16
K- 07 30 21 97	G 1/4	6.0 - 12.0 bar	to 650 l/min	27,0	7,0	3,0	16
K- 07 30 21 98	G 1/4	10.0 - 18.0 bar	to 870 l/min	27,0	7,0	3,0	16
K- 07 30 21 99	G 1/4	16.0 - 32.0 bar	to 1600 l/min	27,0	7,0	3,0	16
K- 07 30 22 00	G 1/4	30.0 - 60.0 bar	to 3000 l/min	27,0	7,0	3,0	16

尽管经过了仔细审阅,但我们无法完全排除发生错误的可能,对所提供的信息数据本公司不承担任何责任。