K-WV 3/2 ELK 230 VAC / 50HZ HANSA

3/2-way valves, electrically operated, with 230 VAC / 50 Hz solenoid

HANSA FLEX

属性

入口压力	2 - 10 bar
温度范围	-10 °C to +50 °C
适用介质	压缩空气
50 Hz 三相交流电压上紧功率	2,2 VA
接通持续时间	ED 100 %
电接口	Connector type C, ISO 15217, 2 poles +PE
50 Hz 三相交流电压固定功率	1,6 VA
功率消耗 DC	2,5 W
保护等级	IP 65
接口螺纹	Material: Die-cast zinc
壳体	Material: Grivory® (PA 66)
流量值测量	At P2 = 6 bar, pressure drop Δp = 1 bar



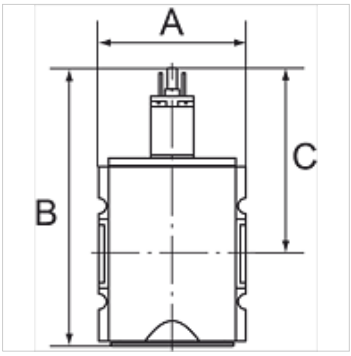

提示

其它数据应客户要求提供。

描述

Pneumatic systems or parts of systems can be switched on and off by means of an electrical signal. When they are switched off, the system is exhausted at the same time.

订购指南

Valves are also available with coil 110 V AC, 50 Hz and in a pneumatically operated version. Please ask for more information.

货品

名称	螺纹	出口	流量 (L/min)	A (mm)	B	C (mm)
K- 07 25 11 09	G 1/4	1/4	2000	52,0	117,8 mm	84,8
K- 07 25 11 10	G 3/8	1/4	2000	52,0	117,8 mm	84,8
K- 07 25 11 35	G 3/8	1/2	4500	63,0	150,3 mm	93,8
K- 07 25 11 36	G 1/2	1/2	4500	63,0	150,3 mm	93,8
K- 07 25 11 41	G 3/4	1/2	12500	85,0	177,7 mm	110,7
K- 07 25 11 42	G 1	1/2	12500	85,0	177,7 mm	110,7

附件

K-SCHALLDAE SINTERBR S	Silencers, sintered bronze, slotted
K-SCHALLDAE SINTERBR GE MS1	Silencers, sintered bronze, with brass hexagon nut and brass thread

备件

K-HALTERBAUSATZ HANSA	Holder HANSA
K-VORSTEUERVENTIL HANSA	Replacement solenoid HANSA
K-GERAETESTECKER FORM C	Connector

尽管经过了仔细审阅,但我们无法完全排除发生错误的可能,对所提供的信息数据本公司不承担任何责任。